Original

inside

GB

Operator's manual

+ INSTRUCTIONS FOR PRODUCT DELIVERY . . . Page 3

"Translation of the original Operating Manual"

Nr. 99 3904.GB.80R.0

NOVADISC 730

(Type PSM 3902 : + . . 01247**)**

NOVADISC 810

(Type PSM 3903 : + . . 01001**)**

NOVADISC 900

(Type PSM 3904 : + . . 01248**)**

• **Disc mower**

Chassis Nr.

Pöttinger - Trust creates Affinity - since 1871

"Quality pays for itself." Therefore we apply the highest quality standards to our products which are constantly monitored by our in-house quality management and our management board. Because the safety, perfect function, highest quality and absolute reliability of our machines in operation are the core competencies for which we stand.

There may be deviations between these instructions and the product as we are constantly developing our products. Therefore no claims may be derived from the data, illustrations and descriptions. Please contact your Specialist Service Centre for any binding information about specific features of your machine.

We would ask you to please understand that changes to the scope of supply with regard to form, equipment and technical specifications are possible at any time.

Product liability, information obligation

Product liability obliges manufacturers and dealers to issue operating instructions for the machine at the point of sale and to instruct the customer on the operation, safety and maintenance regulations governing the machine.

A confirmation is required to verify that the machine and operating instructions have been handed over correctly.

For this purpose

- **Document A** is to be signed and returned to Pöttinger or via the internet to www.poettinger.at
- **Document B** remains with the specialist dealer handing over the machine.
- **The customer receives document C**.

For the purposes of product liability law, every farmer is an entrepreneur.

In the terms of product liability law, damage to property is any damage arising due to the machine, but not to the machine, and an excess (500 euros) exists for this liability.

Corporate damage to property within the terms of the product liability law is excluded from this liability.

Be advised! The operating instructions must also be handed over with any subsequent machine sale or transfer and the transferee must be instructed in the regulations stated.

Refer to PÖTPRO for additional information about your machine:

Are you looking for suitable accessories for your machine? No problem! All the information you require is here at your disposal. Scan the QR code on the machine's type plate or look under www.poettinger.at/poetpro

And if we don't have what your looking for, then your Specialist Service Centre is there for you with help and advice.

(GB) INSTRUCTIONS FOR PRODUCT DELIVERY

Dokument D

PÖTTINGER Landtechnik GmbH
Industriegelände 1
A-4710 Grieskirchen
Tel. 07248 / 600 -0
Telefax 07248 / 600-2511

According to the product liability please check the above mentioned items.

Please check. [X]

- ❑ Machine checked according to delivery note. All attached parts removed. All safety equipment, drive shaft and operating devices at hand.
- ❑ Operation and maintenance of machine and/or implement according to operating instructions explained to the customer.
- ❑ Tyres checked re. correct pressure.
- ❑ Wheel nuts checked re. tightness.
- ❑ Drive shaft cut to correct lenght.
- ❑ Correct power-take-off speed indicated.
- ❑ Fitting to tractor carried out: to three-point linkage
- ❑ Trial run carried out and no defects found.
- ❑ Functions explained during trial run.
- ❑ Pivoting in transporting and operating position explained.
- ❑ Information given re. optional extras.
- ❑ Absolute need to read the operating manual indicated.

In order to prove that the machine and the operating manual have been properly delivered, a confirmation is necessary.
For this purpose please do the following:

- sign the **document A** and send it to the company Pöttinger or via the internet to www.poettinger.at
- **document B** stays with the specialist factory delivering the machine.
- **document C** stays with the customer.

Table of contents

Attention!

Observe Safety Points in Supplement!

CE sign

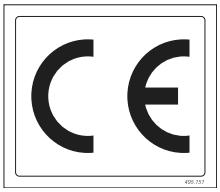

The CE sign, which is affixed by the manufacturer, indicates outwardly that this machine conforms to the engineering guideline regulations and the other relevant EU guidelines.

EU Declaration of Conformity (see supplement)

By signing the EU Declaration of Conformity, the manufacturer declares that the machine being brought into service complies with all relevant safety and health requirements.

Recommendations for work safety

All points referring to satety in this manual are indicated by this sign.

Meaning of warning signs

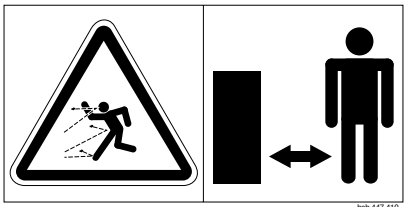

Danger - flying objects; keep safe distance from the machine as long as the engine is running.

Wait until all machine components have stopped completely before touching them.

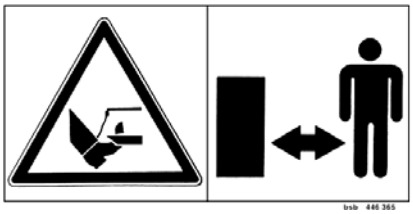

Stay clear of mower knife area as long as tractor engine is running with PTO connected.

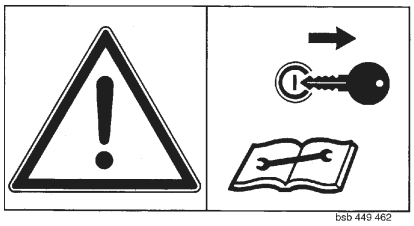

Shut off engine and remove key before performing maintenance or repair work.

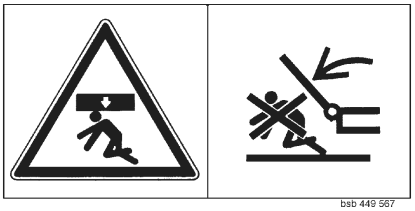

Stay clear of swinging area of implements

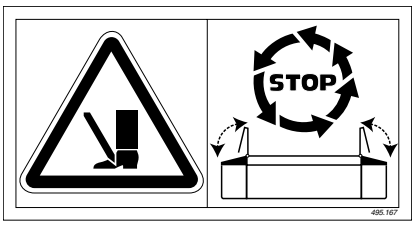

Close both side protective coverings before engaging p.t.o..

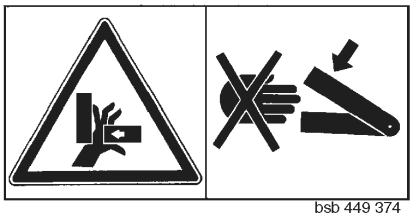

Never reach into the crushing danger area as long as parts may move.

Attaching implement to tractor

Attach mower centrically to tractor

- Adjust lower link accordingly.
- Secure the lower link so that the implement cannot swing out sideways.

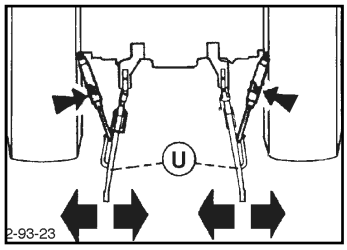

Setting the lower linkage of the lifting mechanism horizontal

- Bring mounting frame to horizontal position by adjusting lower link jackscrew (15).

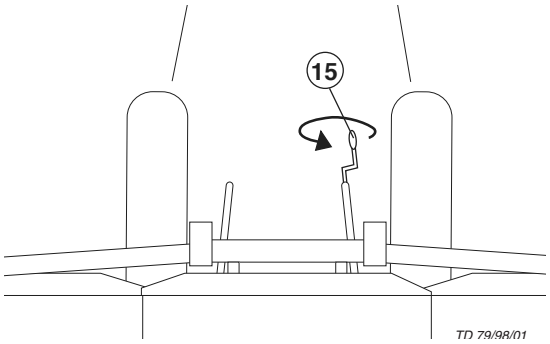

Pin implement to three-point hitch

- Adjust lower link bolts (1) on bearing frame according to the three-point category and track width using the fixing screw. Mower must not touch rear tractor tyres.

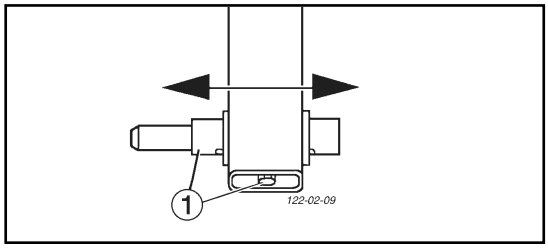

Ensure fixing screw is inserted in required hole (see figure below) on the bolt! Otherwise mower may come loose from coupling, fall to the ground and cause damage to property.

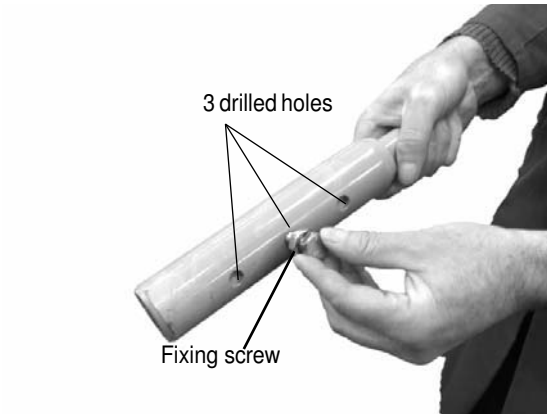

Setting lower link height

- Set tractor hydraulics (ST) using the depth stop.

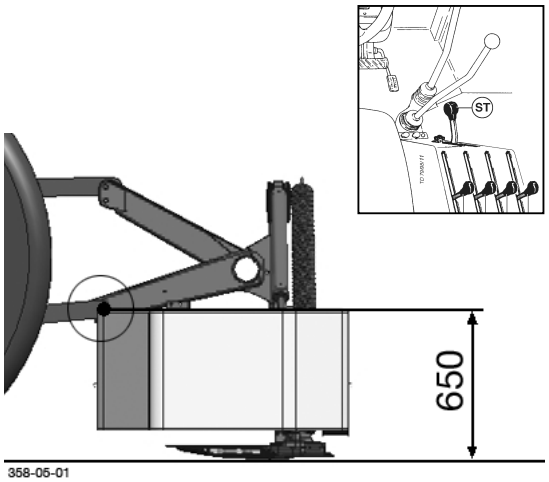

- The distance between the lower link bolts and bottom should be of about 650 mm.

Safety hints:

see Supplement A1 point 8a. - h.)

Before first use, check the length of the cardan shaft and if necessary adjust it.

(See Chapter "Adjusting the cardan shaft" in Attachment B).

Adjust upper linkage spindle

- The mower is positioned horizontal or slightly forwards by turning the upper linkage spindle (16).
- Turning upper link spindle (16) adjusts the cutting height.

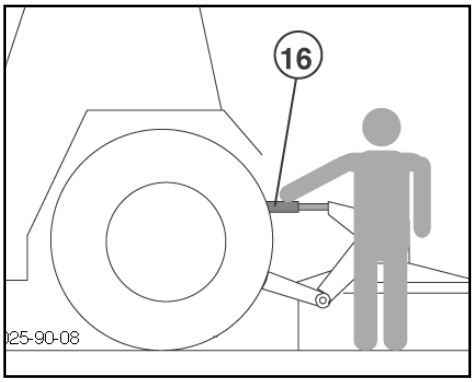

Uncouple cardan shaft

- Before initial operation check the cardan shaft length and adapt if necessary. See alse chapter "CARDAN SHAFT" in Supplement B.

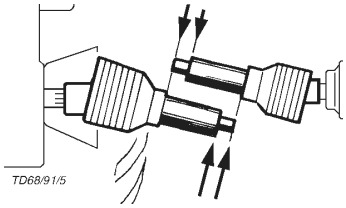

Connect hydraulic plug-in connector (60)

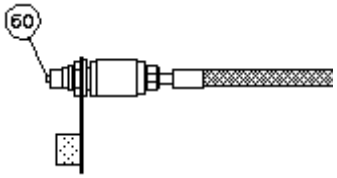

Establish power supply

- Connect the supply cable to tractor (E3).

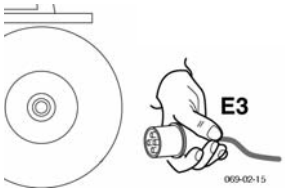

POSITION FLAP RELEASE ROPE (S) IN THE TRACTOR CABIN.

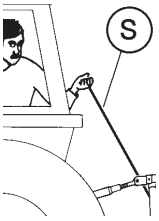

Parking implement in working position

Attention!

Make sure that swivel area is free and that nobody is standing in the danger area.

1. Raise stop-lock support using the rope (S).

- Stop-lock support to position „B“

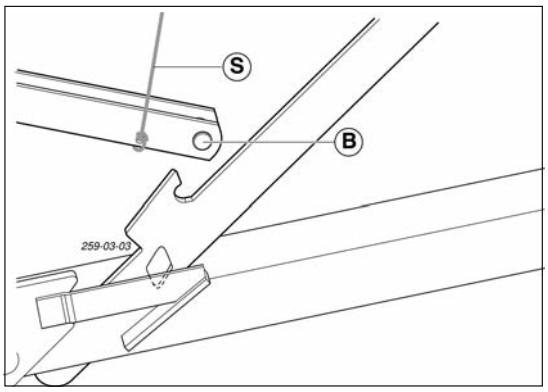

2. Lower cutter bar hydraulically to the ground

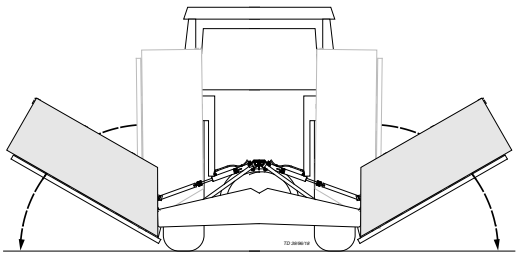

- actuate servo-valve (ST)
- release the rope (S) during lowering

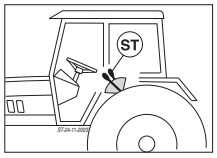

3. Lower support stand and secure (F)

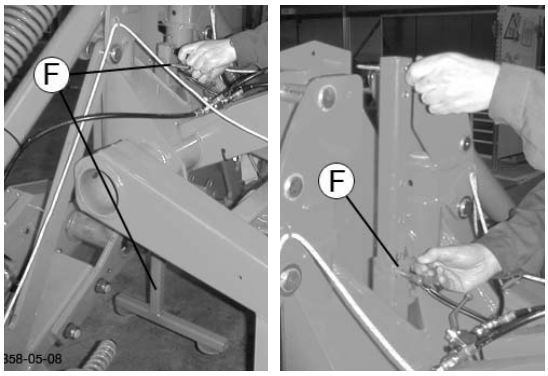

4. Dismount implement from tractor

- Uncouple hydraulic lines
- disconnect upper link
- remove rope from tractor cabin
- disconnect lower link
- disconnect drive shaft and lay it down

Parking implement in transport position

Note!

Additional parking supports (SV, SH) can be fitted to implement when parking in transport position (optional extra)

Note!

Remove the parking supports from the machine during operation

Front fitting of parking supports (SV)

- Pin the support stands (SV) left and right in the recesses
- secure with linch pin (V)

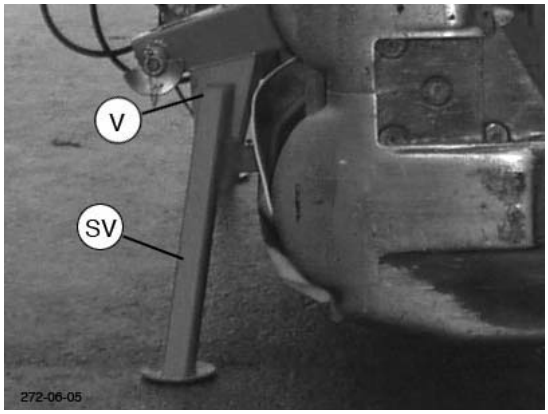

Rear fitting of parking supports (SH)

- Pin the supporting yoke (SH) in retaining tube
- secure with linch pin (V) (left and right)

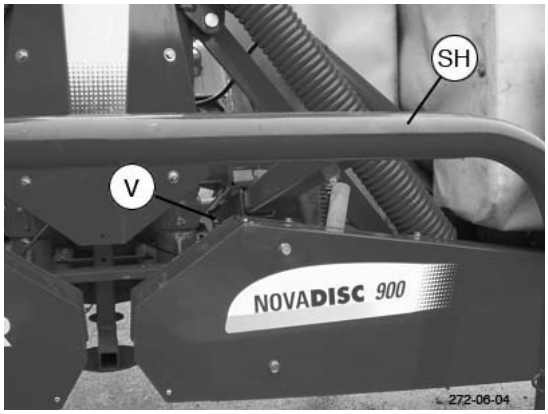

Parking in the open

When parking for longer periods in the open, clean plunger rods and then coat with grease.

At season‘s end

- clean plunger rod and all other shiny parts, then grease them
- pay attention to the hints in chapter „MAINTENANCE“

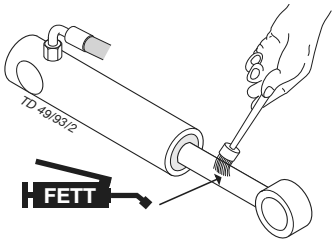

Note

A rusty plunger rod can damage cylinder‘s sealing elements.

Changing to transport position

Starting position

- **Implement is attached to tractor**
  - see chapter „Ataching implement to tractor“
- **Support stand pulled up and secured (F)**

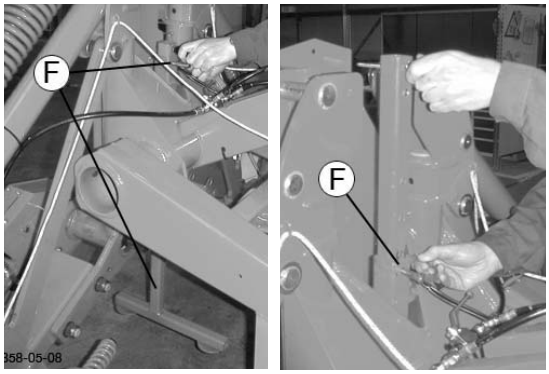

1. Fold front protection covers back(1)

This is necessary with many tractor types. It prevents damage to the rear window or the mud guard later on when raising the mower bar.

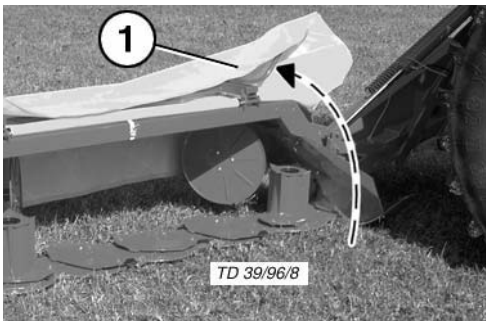

2. Fold external protection cover up (10)

- The external guard plate (10) can be swivelled in to reduce the total height (- 30 cm) when in the transport position.

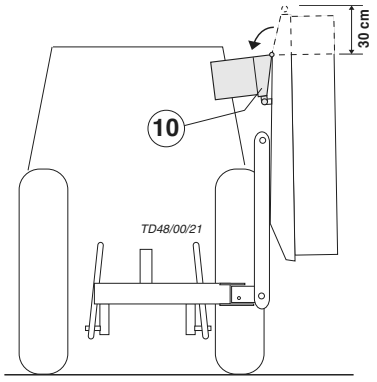

3. Raise stop-lock support using the rope (S)

- stock-lock support to position „B“

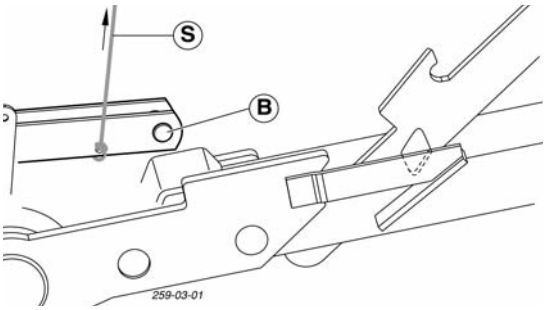

4. Raise cutter bar hydraulically

- actuate servo-valve (ST)
- release rope (S) during raising
- let stop-lock support engage (T1)

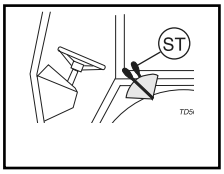

5. Briefly move servo-valve (ST) into „LOWER“ position (S)

This enables stop-lock support to sit firmly in the catch (T1) and secures cutter bar in the raised position (T)

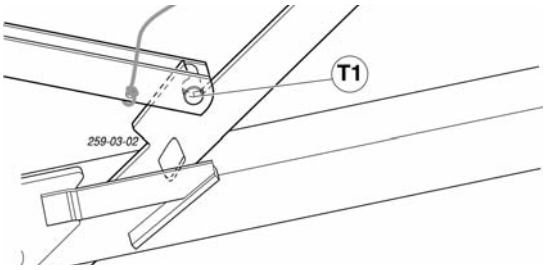

Safety Precaution!

see supplement-A1 points 7.), 8c. - 8h.)

- **Changing from working position to transport position is only to be carried out on even, firm ground.**
- **Never let the mowing mechanism run with the mower raised.**
- **Before you leave the tractor, lower the machine on to ground!**

Road Transport

- **Observe the regulations issued by your country‘s legislative body.**
- **Travelling on open roads may only be carried out as described in chapter „Transport position“.**
- **Fasten lower hydraulic link so that implement cannot swing out sideways.**

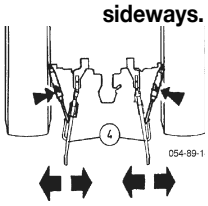

Changing to working position

Safety Precaution!

see supplement-A1 points 7.), 8c. - 8h.)

- **Changing from working position to transport position is only to be carried out on even, firm ground.**
- **Never let the mowing mechanism run with the mower raised.**
- **Before you leave the tractor, lower the machine on to ground!**

Starting position

- **Implement is attached to tractor**
  - see chapter „Ataching implement to tractor“
- **Cutter bar in transport position**

- **Make sure that swivel area is free and that nobody is standing in the danger area.**

Swinging the cutter bar down

1. Raise stop-lock support using the rope (S)

- Put hydraulic control device (ST) briefly at „lift“, in so doing the fixing of the stop-lock support is eased in the catch.
- stock-lock support to position „B“

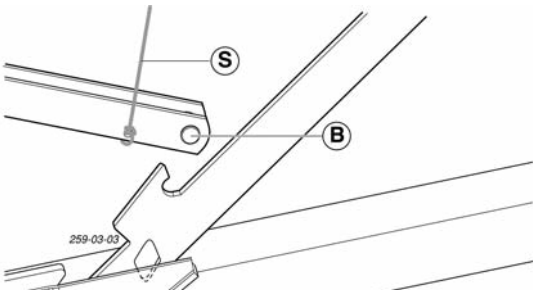

2. Lower cutter bar hydraulically to the ground

- Move hydraulic control valve (ST) to the “LOWER” position (S)
- Release rope (S) during raising
- Move hydraulic control valve (ST) to the “FLOAT POSITION” (only with double-action hydraulic control valve)

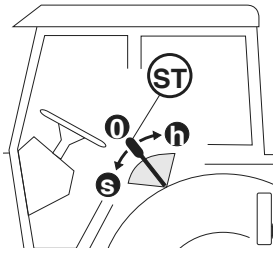

3. Close external protection covers (10)

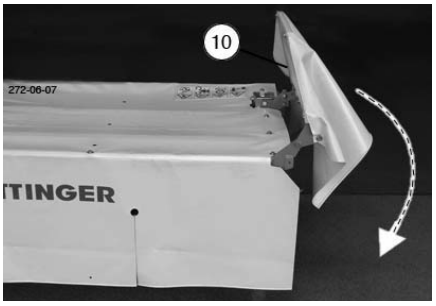

4. Close front protection covers (1)

- Operation only with closed protection covers.

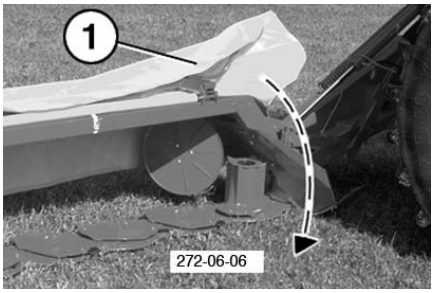

General guidelines on working with the implement

- The mower unit is suitable for an upward inclination of 22° resp. downward 30° anlge of repose.

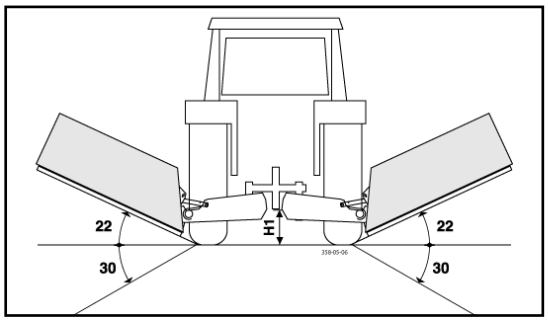

Beware!

Danger - flying objects; keep safe distance from the machine as long as the engine is running.

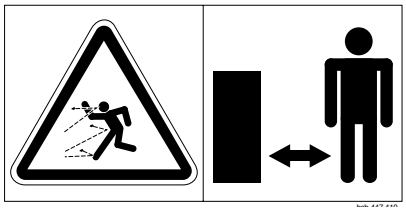

Mowing

1. Set the lower link of the hoist horizontally (15)

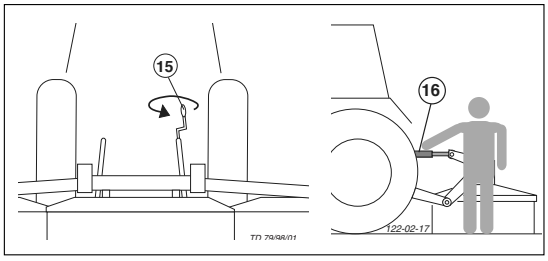

2. Set cutting height by turning the upper link spindle (16)

- max. 5° mower discs inclination

3. Set height (H1) of hoist

This hoist position (H1) does not need to be changed when mowing and turning.

Lift resp. lower the implement with the help of the tractor hoist until it reaches the distance (H1 = 0).

Set the ground bearing load of the mower bar

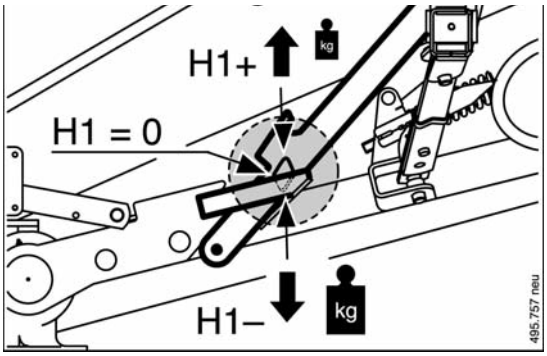

H1 = 0 basic position

H1 + reduce bearing pressure

H1 – increase bearing pressure

4. For mowing, slowly engage the p.t.o. shaft away from the crop and bring the mower rotor up to full speed.

Smoothly increasing the p.t.o. speed will avoid system-related noises from the p.t.o. shaft free-running.

- The driving speed depends on the ground conditions and the plants to be mown.

5. Hydraulic servo-valve (ST

- Single-action hydraulic control valve (ST) on "LOWER"

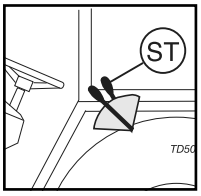

- Double-action hydraulic control valve (ST) on "Floating position"

Safety hints:

• Never let the mower operate in lifted position.

• Lower the implement completely when you leave the tractor!

Beware!

Do not step in the mower area as long as the gear motor is in operation.

Turning when mowing

The mower bars can be swivelled up hydraulically (22°).

- For this it is not necessary that the gear be switched off.
- The hoist position (H1) does not need to be changed when turning.

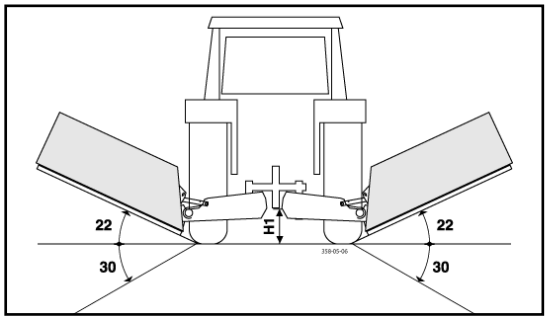

Reversing

Raise the mower when reversing!

Anti-collision device

When mowing around trees, fences, boundary stones etc., collisions between the cutter bar and obstacles can occur despite careful and slow driving. So in order to prevent such damage, an anti-collision device has been provided for the mower.

Be advised!

It is not the purpose of the collision safety device to prevent damage to the machine when working at full speed.

- The overload safety (34) allows the mower bars to swivel back when running into an obstacle.
- If you drive backwards, the overload safety snaps back in.

If you are not sure whether the cutting area is really free of obstacles, please work at an appropriate slow speed!

Setting:

If the impact safety is too little operated, the hexagonal nut can be twisted.

Setting values:

NOVADISC 730 = 110 mm

NOVADISC 810 = 105 mm

NOVADISC 900 = 105 mm

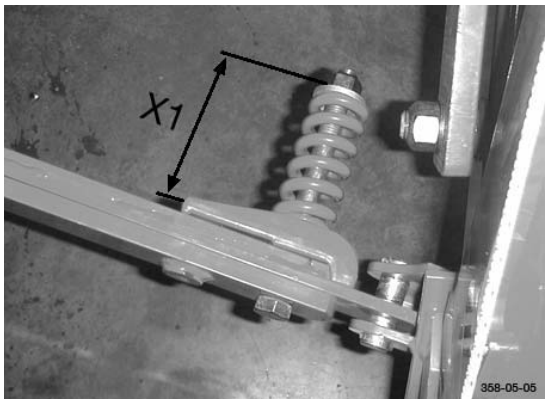

Important points before starting work

Safety hints:
see supplement-A Pkt. 1. - 7.)

After the first hours of operation

• Retighten all knife screw fittings.

Safety hints

1. Check

- Check the condition of knives and the knife holder.
- Check cutting drums for damage (see also chapter „Maintenance“).

2. Switch-on the machine only in working position and do not exceed the prescribed power take-off speed.

1000 Upm

A transfer, which is located near the gear, advises which p.t.o. speed your mower unit is equipped for.

- Turn the p.t.o. on only when all safety devices (coverings, protective aprons, casings, etc.) are in proper condition and attached to the implement in the correct protective positions.

3. Pay attention to correct p.t.o. direction of rotation!

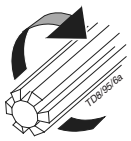

4. Stay clear while engine is running.

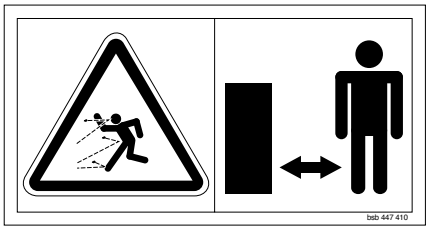

- Keep people out of the danger zone - foreign bodies which can be ejected by the mower could injure them. Special care is necessary on or near stony ground.

5. Damage protection!

- The surface to be mowed must be free of obstructions or foreign objects. Such objects (e.g. large stones, pieces of wood, boundary stones, etc.) can damage the mower unit.

In the event of a collision

- Stop immediately and switch off the drive.
- Carefully check the implement for damage.

  The mowing discs and their drive shaft must be checked in particulare (4a).
- Have the implement checked also by a specialist workshop if necessary.

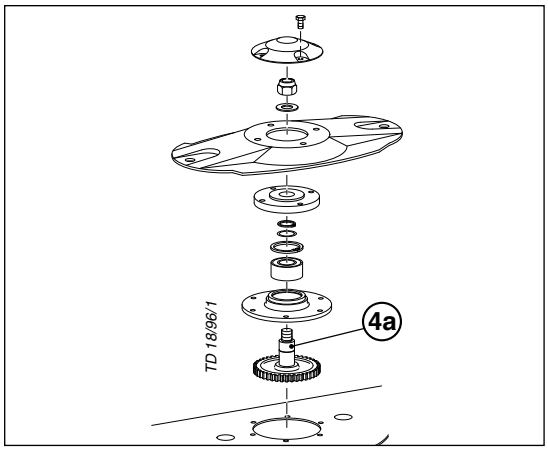

After any contact with foreign objects

- Check the condition of knives and the knife holder.
- Retighten all knife screw fittings.

6. Wear hearing protection

The noise level in the workplace can deviate from the measured value (see Technical Data) partly because of the differing cabin types of various tractors.

- If a noise level of 85 dB (A) is reached or exceeded, the farmer must have suitable hearing protection in readiness (UVV 1.1 §2).
- If a noise level of 90 dB (A) is reached or exceeded, the hearing protection must be worn (UVV 1.1 § 16).

Working on slopes

Take care when turning on slopes!

The tractor's travelling characteristics are influenced by the weight (G) of the mower unit. This can lead to dangerous situations, especially on slopes.

Safety information

- Reduce speed when bending accordingly.
- It is better to travel in reverse on a slope than to carry out a risky turning manoeuvre.

Danger of tipping occurs

- when the mowing units are lifted hydraulically
- when bending with lifted mowing unit

Note:

Raise the mower when reversing!

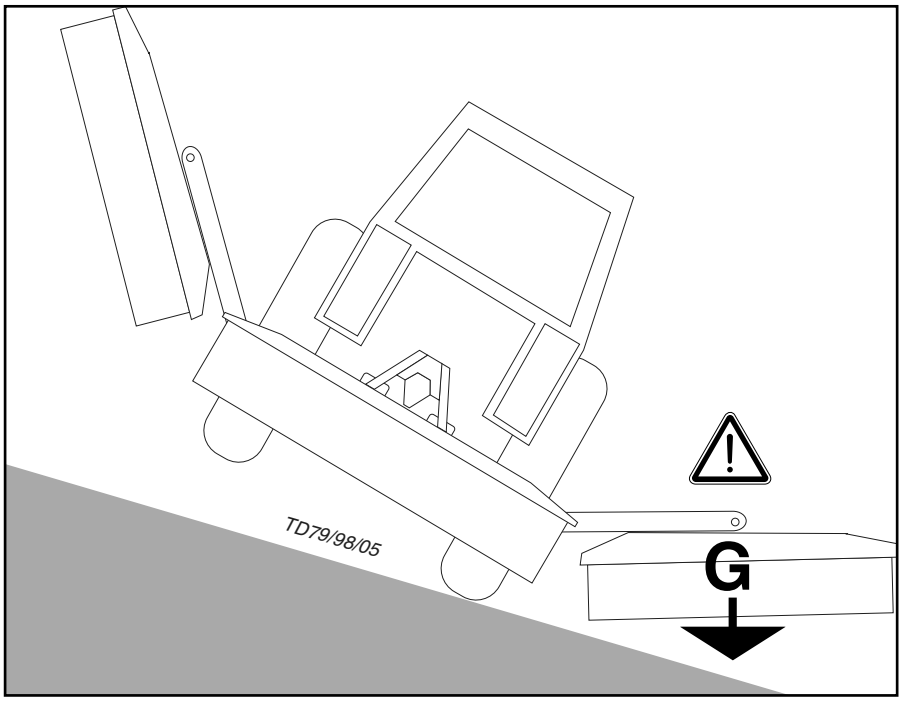

Swath Discs

With the swath discs a narrower swath is formed when mowing. This prevents them from being run over by the tractor's wide tyres.

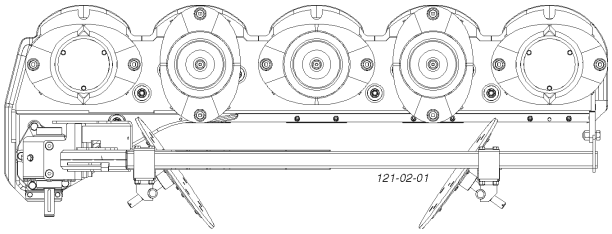

NOVADISC 225
NOVADISC 265 / NOVADISC 730
NOVADISC 305 / NOVADISC 810
NOVADISC 350 / NOVADISC 900

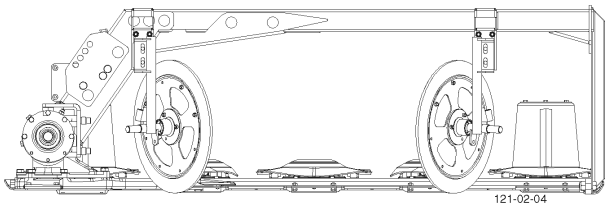

Additional swath discs

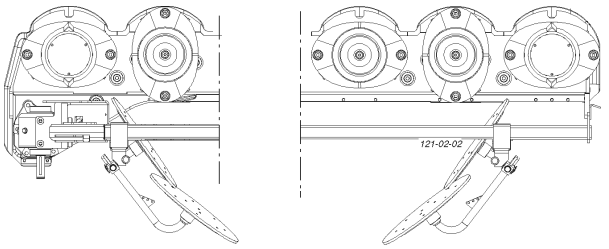

NOVADISC 265 / NOVADISC 730 [1)]
NOVADISC 305 / NOVADISC 810 [1)]
NOVADISC 350 / NOVADISC 900 [1)]

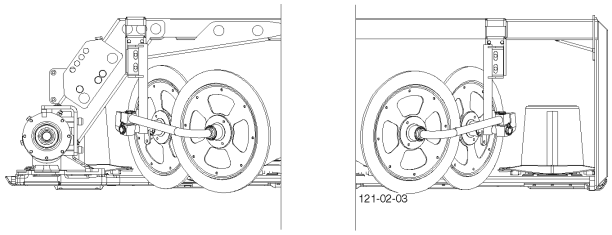

[1)] Only possible on the outside

Protective apron

Release the protective apron in the swath discs area.

- more information in the supplement of this operating manual

- Only use appropriate tools to cut out!
- The cutting line is the joining between the holes, as shown in the supplement of this operating manual.
- Depending on the number of swath discs fitted, select the corresponding area to be cut

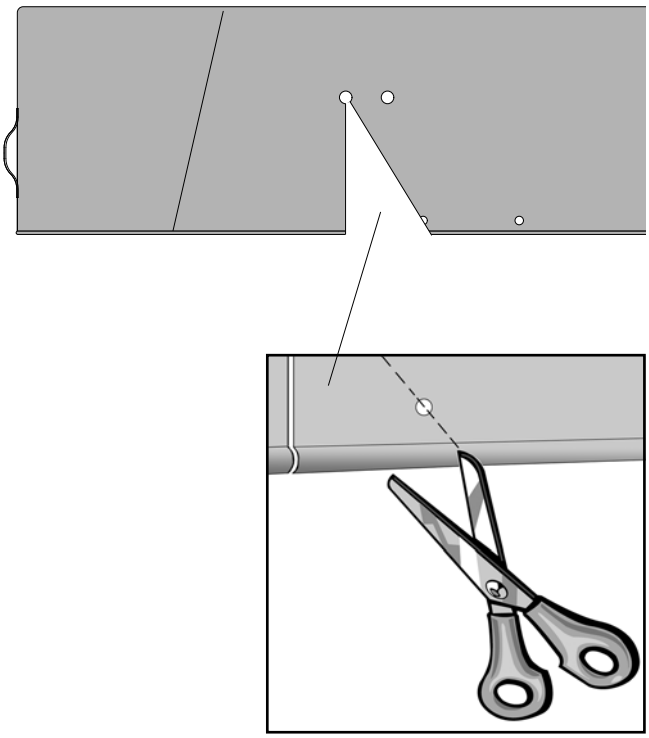

Flat cone conveyor (Optional extra)

Flat cone conveyor are recommended

- to improve the conveyance rate of swath deposits, particularly with heavy, thick fodder components
- For individual parts see Spare Parts List

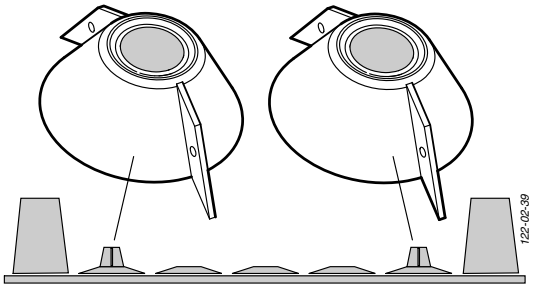

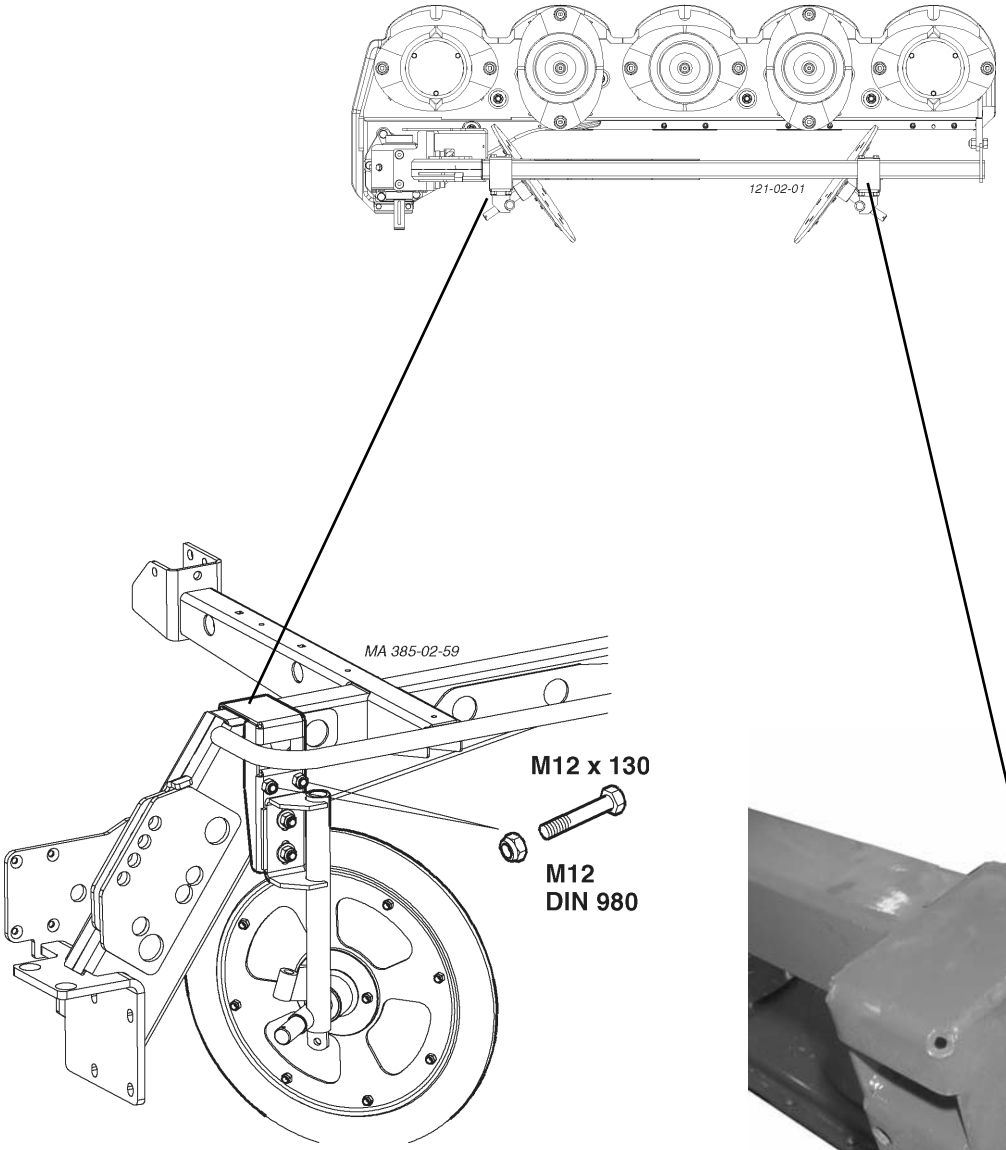
121-02-01
MA 385-02-59
M12 x 130
M12
DIN 980

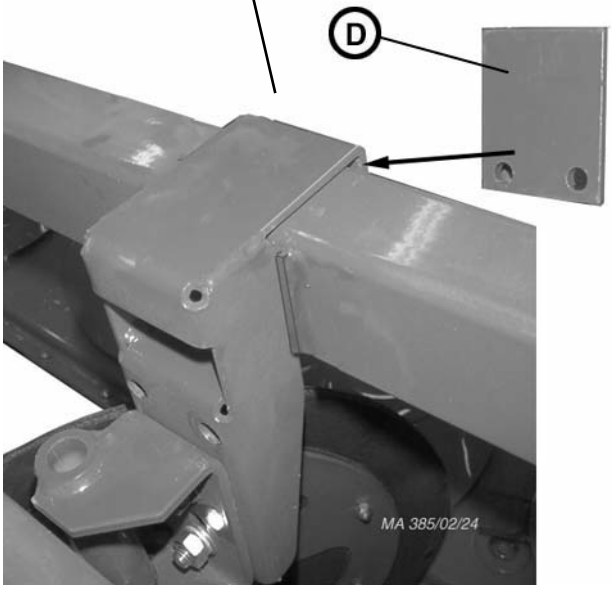
D
MA 385/02/24

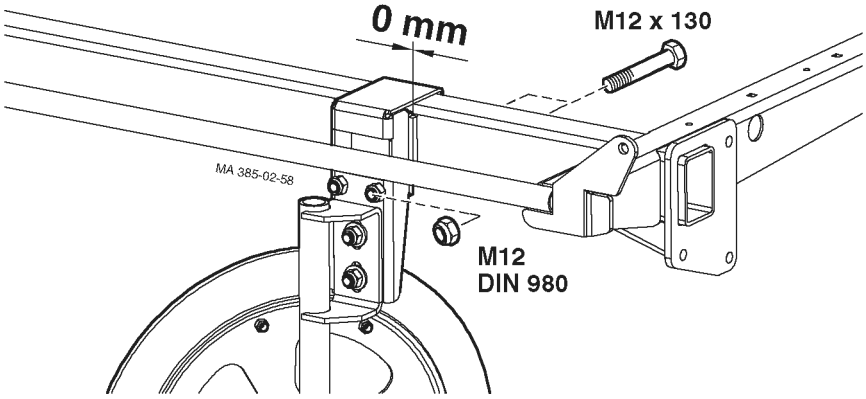
0 mm
M12 x 130
MA 385-02-58
M12
DIN 980

Safety advice

- Switch off engine prior to any adjustment, maintenance or repair work.

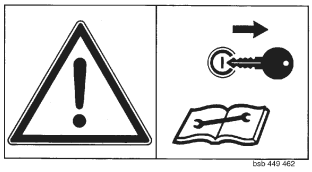

General maintenance information

Please observe the infiormation below to maintain the implement in good condition even after a long period in operation:

- Re-tighten all bolts after the first hours in operation.

The following should be checked in particular:

Blade bolt connections at mower

Tine bolt connections at rake and tedder

Spare parts

a. Original parts and accessories are specially designed for the implements.

b. We expressly point out that we have not tested or approved any original parts and accessories not supplied by us.

c. The installation and/or use of such products may under certain circumstances negatively modify or impair the propeties of the implement as specified in the design. Any liability on the part of the manufacturer is excluded in the event of any damage due to the use of non-original parts and accessories.

d. Any unauthorised modifications or the use of components and attachments at the implement rules out any liability on the part of the manufacturer.

Cleaning of machine parts

Be advised! Do not use high-pressure washers for the cleaning of bearing- and hydraulic parts.

- Danger of rust!
- After cleaning, lubricate the implement according to the lubrication plan and perform a brief test run.
- Cleaning pressure being too high may damage the paint.

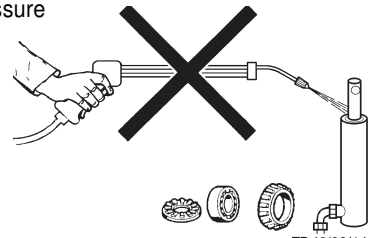

Parking in the open

Clean and protect the piston rods with grease prior to longer periods parked outside.

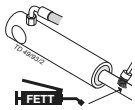

Winter storage

- Clean implement thoroughly prior to winter storage.
- Put up protection against weather.
- Change or top up gear oil.
- Protect exposed parts from rust.
- Lubricate all greasing points according to lubrication chart.
- Disconnect terminal, store dry and protected from frost.

Cardans

- See information in Attachment

Please observe the following for maintenance!

The instructions in these Operating Instructions apply.

If no particular instructions are available here, then the information in the instructions supplied by the respective cardan shaft manufacturer apply.

Hydraulic unit

Caution injury and infection hazard!

Liquids discharging at high pressure may penetrate the skin. Therefore seek immediate medical help!

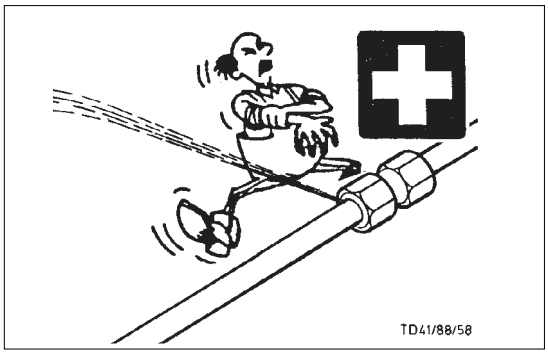

Make sure that the hydraulic system is suitable for the tractor before connecting the hydraulic lines.

After the first 10 hours in operation and thereafter every 50 hours in operation

- Check hydraulic unit and piping for leaks and if necessary re-tighten bolt connections.

Prior to every taking into operation

- Check hydraulic hoses for wear.

  Replace any worn or damaged hydraulic hoses immediately. The replacement hoses must meet the manufacturer's technical requirements.

Hose lines are subject to natural ageing. The period of use should not exceed 5 – 6 years.

Safety advice

• Switch off engine and remove ignition key prior to any adjustment, maintenance or repair work.

• Only perform work underneath the implement with secure supports.

• Re-tighten all bolts after the first hours in operation.

• Only park implement on flat, firm ground.

Repair information

Please observe the repair information in the Attachment (If available).

Safety advice

Clean the coupling plug of the hydraulic hoses and the oil socket prior to each connection.

Note any abrasion and clamping points.

General safety information

Caution

Cleaning and maintenance works shall be performed only with the machine turned off and the mowing units lowered.

• Do not work under the machine without it being supported safely.

Oil level control of the mower bars

- Under normal operating conditions, oil is to be replenished annually.

1. Lift one side of the mower bar X3 and support it.

X3 = X2 + X1

X1 = Distance from ground to vats upper edge.

X2 = Distance from vats upper edge left to vats upper edge right.

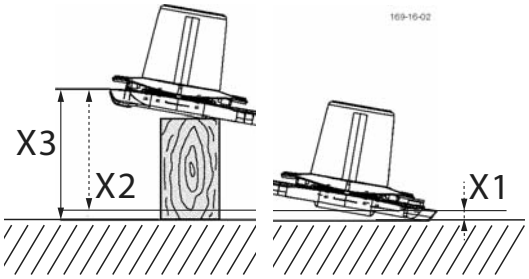

NOVADISC 730: X2 = vertically

NOVADISC 810: X2 = 600 mm

NOVADISC 900: X2 = 240 mm

- The side where the oil refill screw is located remains on the ground.
- Lift the mower bar on the other side (X1) and support it with suitable means.

2. Leave mower bar in this position for about 15 minutes.

- This time is necessary to allow the oil to collect in the lower area of the mower bar.

3. Remove oil fill screw (63).

Measure oil level through the opening (63).

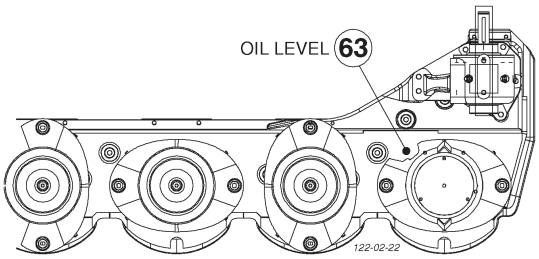

4. Oil level check

Important information when measuring the oil level:

You jack up the cutter bar depending on the length.

The cutter bar width must be adjusted in precise horizontal position. (see image).

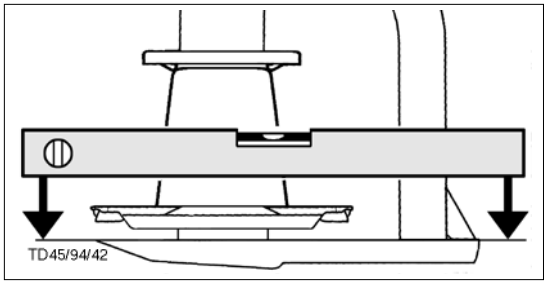

4.1 Oil level for NOVADISC 730:

The oil level is correct when the oil level reaches 5 mm below the level screw.

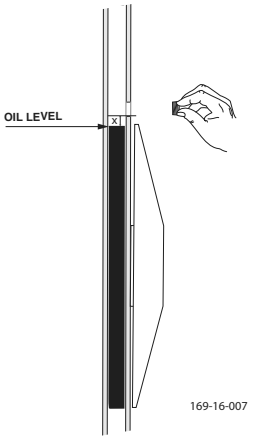

4.2 Oil level for NOVADISC 810/NOVADISC 900:

The oil level is correct if the gear oil reaches the lower edge of the level opening (63) (OIL LEVEL).

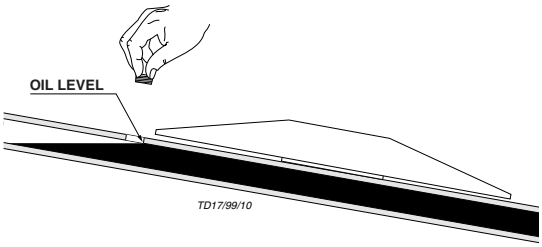

5. Topping up oil

Complete with the missing oil quantity.

Note

• Too much oil can cause the cutter bar to overheat during operation.

• Too little oil does not guarantee the necessary lubrication.

Cutter bar oil change

- Change oil after the first 50 operating hours or after 100 ha at the latest.

Note:

- Change oil when at operating temperature.

  The oil is too viscous when cold. Too much old oil remains stuck to the gearwheels and thus any suspended matter present cannot be removed from the gearing.

Oil quantity

NOVADISC 730: 2 x 3.1 litre SAE 90

NOVADISC 810: 2 x 3.5 litre SAE 90

NOVADISC 900: 2 x 4.0 litre SAE 90

- Raise the lifting mechanism of the tractor completely.
- Hydraulic control unit (ST) to "LOWER".

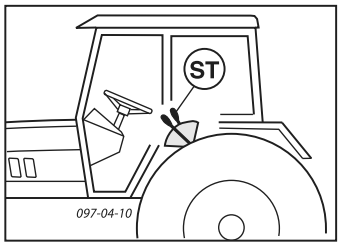

- The cutter bar must hang down at the edge.
- Take out oil drain plug (62), let oil run out and dispose of waste oil correctly.

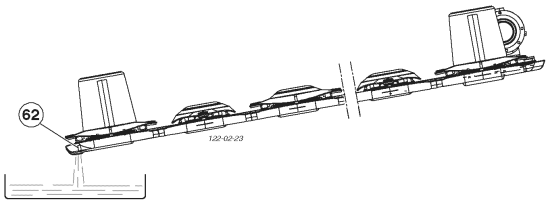

Oil level check, angular gear

- Perform oil level check with the available oil probe. On the oil probe is marked the oil level (OIL LEVEL).
- Change oil after the first 50 operating hours.

  Under normal operating conditions, oil is to be replenished annually (OIL LEVEL).
- Change oil after 300 ha at the latest.

Oil quantity:

0.95 litre SAE 90

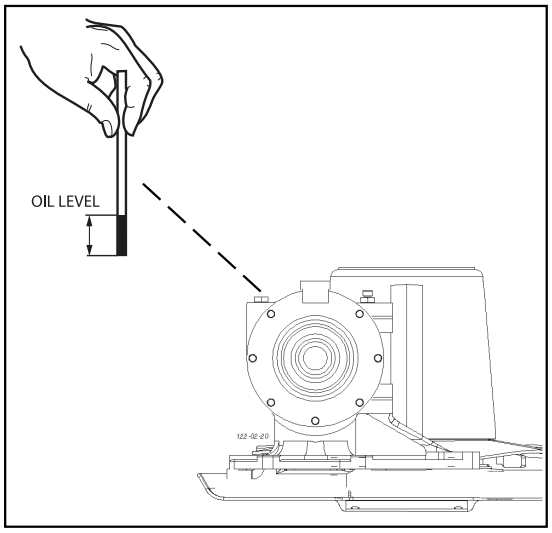

V-belt drive

- Check V-belt tension:

  After 1 hour, after 5 hours, after 20 hours then occasionally.

Setting value:

1 - 3 mm

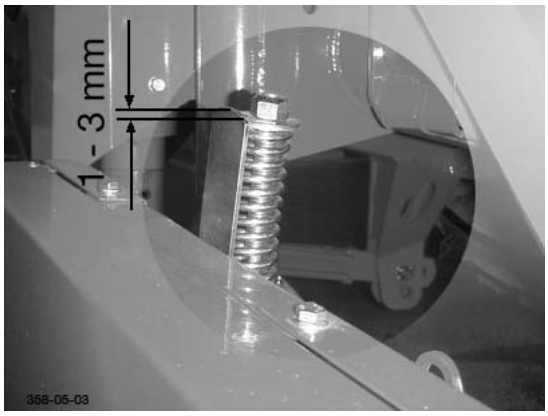

- Re-tensioning is only required if the adjustment dimension is more than 3 mm.
- If any of the 4 V-belts is damaged or twisted, then all 4 V-belts are to be replaced.

CAUTION!

If the V-belts are too highly tensioned, there is a risk of damage to the ball bearings and the shafts.

Setting relief springs

To avoid damaging the sward, the mower bar must

- take almost a horizontal position just before touching the ground
- be set down with the exterior side first
- then with the interior side

You achieve this by setting the short relief springs (" X ")

If the interior side of the mower bar touches the ground first, the relief spring must be tensioned. ("X" smaller)

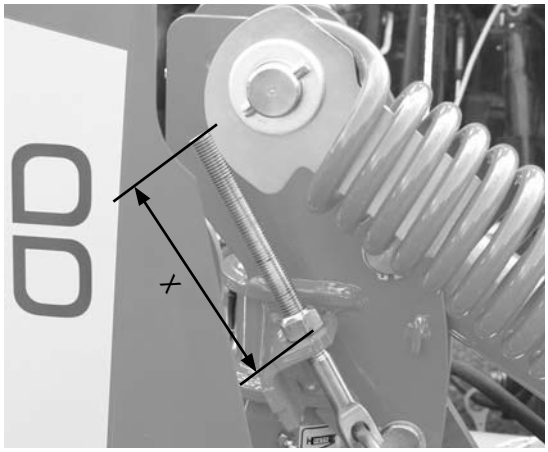

Setting relief springs

NOVADISC 730	" X " =	120 mm
NOVADISC 810	" X " =	140 mm
NOVADISC 900	no relief spring	

Installing cutter blades

Be advised!

The arrow on the cutter blade shows the cutter disc's direction of turn.

Before fitting, clean the coating from the screw tightening surfaces

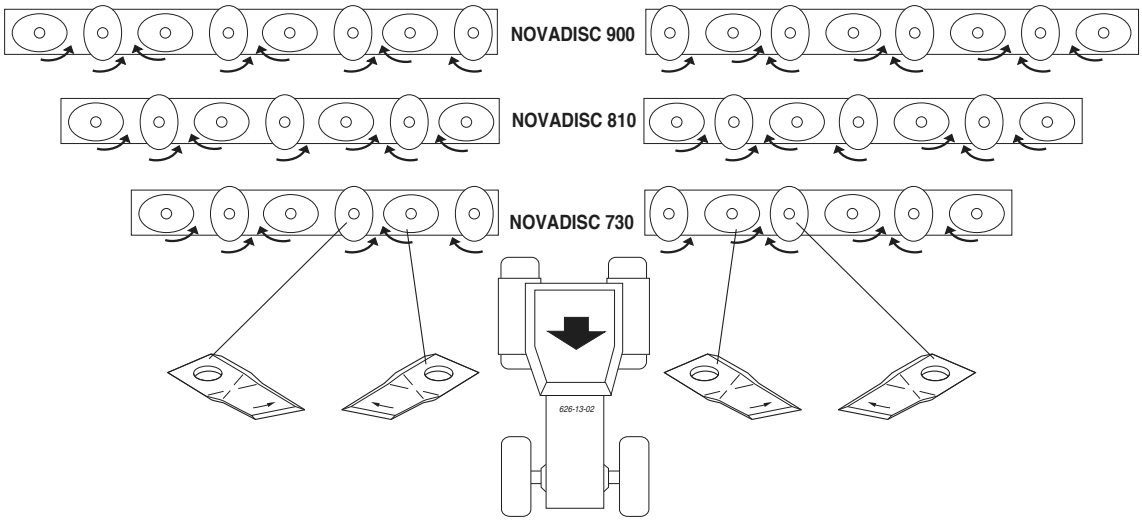

Mountain drive version for NOVADISC 730

Checking wear on mowing blade holders

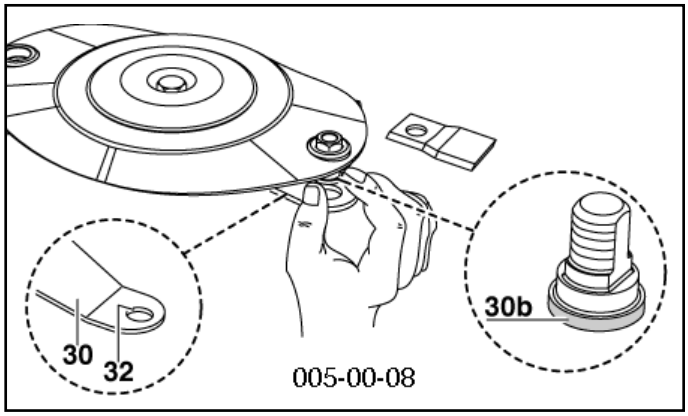

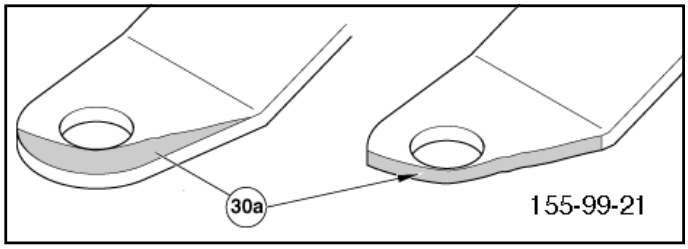

Wearing parts are:

- mounting of mowing blades (30)
- bolts of mowing blades (31)

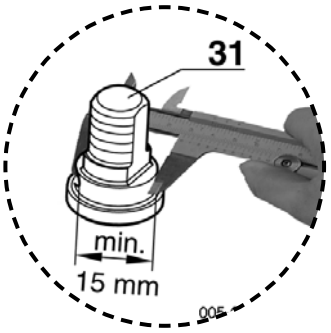

Attention!

Danger of accident if wearing parts are worn

If such wearing parts are worn out they must not be used any longer.

Otherwise accidents may be caused through parts that are flinged away (e.g. mowing blades, fragments...)

Process of visual control:

1. **remove mowing blades**
2. **remove grass and dirt**
   - around pin (31)

Attention !

Danger of accident if:

- the central part of pin of blade must have a minimum of 15 mm
- the wearing area (30a) has reached the edge of the boring
- the pin of the blade is worn in the lower part (30b)
- the pin of the blade is no longer firmly seated

If you notice one or several of these characteristics of wear stop mowing at once!

Worn parts must be replaced by original parts made by Pöttinger immediately !

Screw down the pin of the blade with the nut with 120 Nm.

Check the suspension of mowing blades as to wear and other damage:

- every time before bringing the machine into operational use
- several times during use
- immediately after hitting an obstacle (e.g. a stone, piece of wood, metal,...)

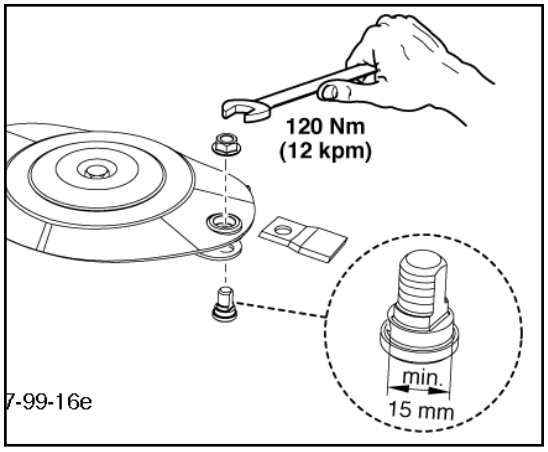

Checking the mowing blade suspension

- Normal check every 50 hours.
- Check more often when mowing on stony terrain or in other difficult operating conditions.
- Check immediately after driving over a hard obstacle (e.g. stones pieces of wood, ect).

Carry out a check

- as described in chapter „Changing the Cutter Blades“

Take note!

Damaged, buckled and worn out parts must not be used further (danger of accident).

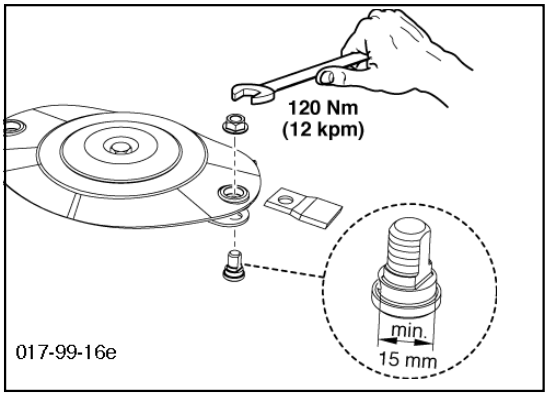

Take note!

For Your Safety - Normal check every 50 hours.

Damaged, buckled and worn out parts must not be used further (danger of accident).

Holder for a quick change of cutter blades

Take note!

For Your Safety

- Regularly check that cutter blades are tightened firmly!
  - Cutter blades on a cutter disc should wear out simultaneously (danger of imbalance).

    Otherwise they are to be replaced with new ones (replace in pairs).
  - Buckled or damaged cutter blades must not be used further.
- Buckled, damaged and/or worn cutter blade holders (30) should not be used further.

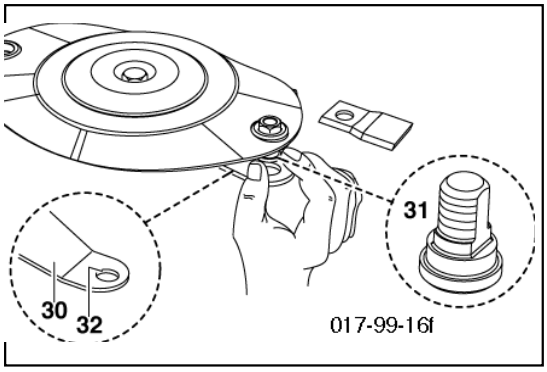

Changing the Cutter Blades

1. **Insert lever from left or right side on the cutter disc ”Pos A” until it stops.**

2. **Swing lever from ”pos. A” to ”pos. B” and push the movable holder (30) down.**

3. **Remove cutter blade (M)**

4. **Clean forage remains and dirt away.**
   - around the bolts (31) and inside the borehole (32)

5. **Check:**
- blade bolts (31) for damage, wear and fitting
- holder (30) for damage, change in position and fitting
- borehole (32) for damage.
  - Side surfaces must not show signs of deformation

6. **Install cutter blades**

7. **Visual check!**
   Check that blade (M) is correctly positioned between blade bolts (31) and holder (30) (see diagram)**.**

8. **Swivel lever (H) to ”A” again and remove.**

- Put the lever (H) in both the recesses in the tool case.
- Close tool case and secure with spring clip (V).

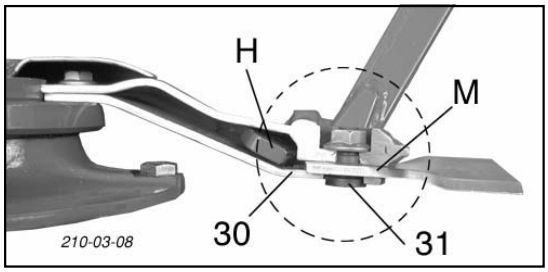

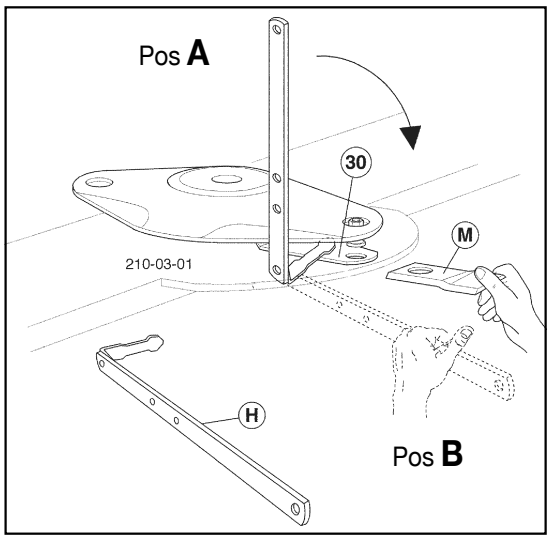

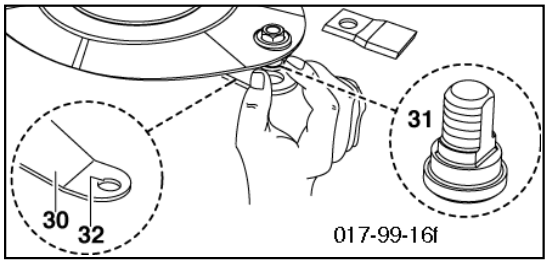

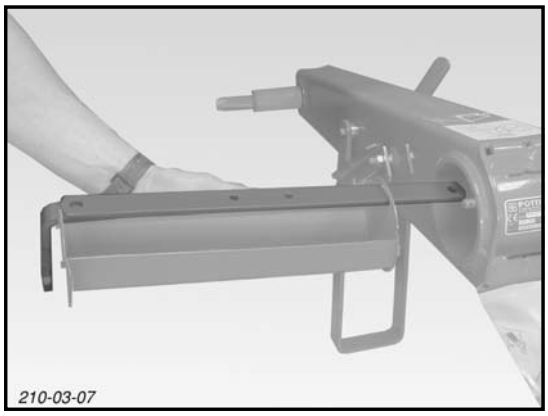

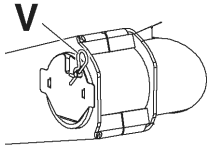

Mowing with only one mower unit

For travelling over fodder already cut or if necessary for reasons of space, one mower unit can be raised.

Safety hint!

Do not raise mower units above the field transport position (FT)

Attention!

Do not enter the mower unit area as long as the drive is running.

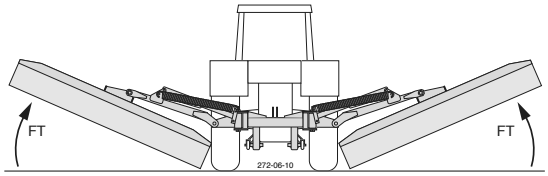

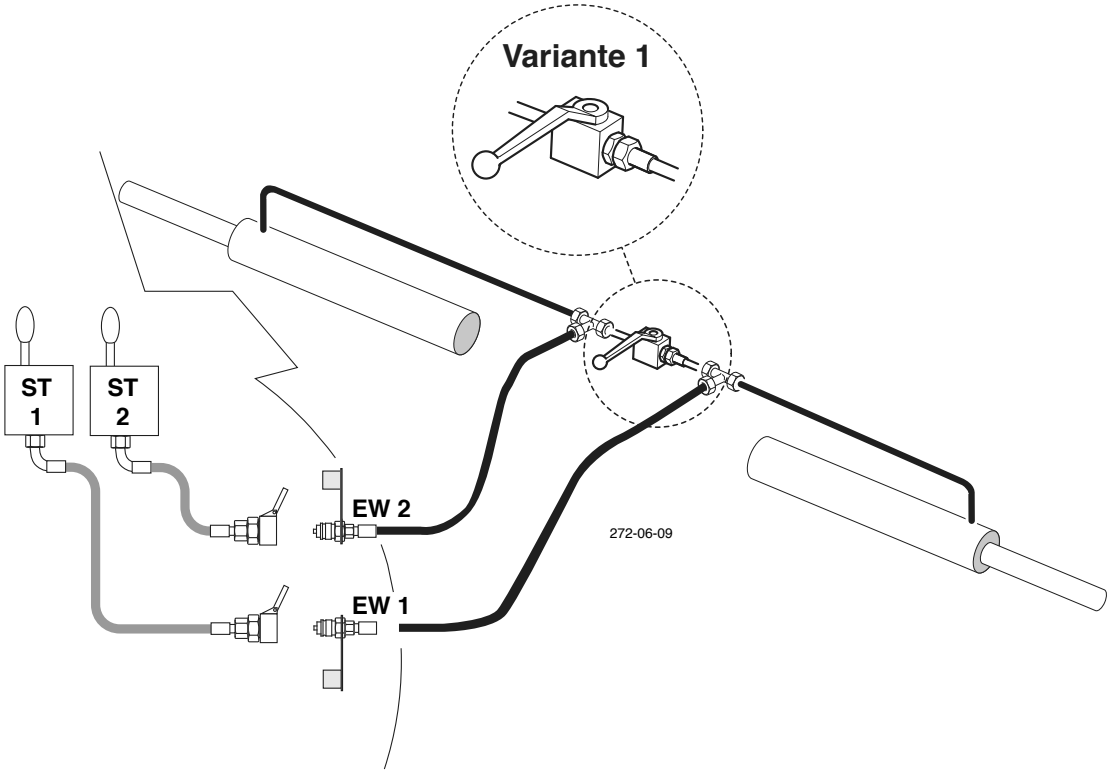

There are 2 variants to activate an individual lift.

Variant 1

2-way stopcock preselection

- When the 2-way stopcock is open, both mower units are raised using only one servo-valve
- When the 2-way stopcock is closed only one mower unit is raised
  - Actuate the relevant hydraulic servo-valve (ST1 or ST2) on tractor
  - The selected mower unit is raised to the field transport position (FT)

Attention!

The 2-way stopcock can be changed only when machine is at a complete standstill

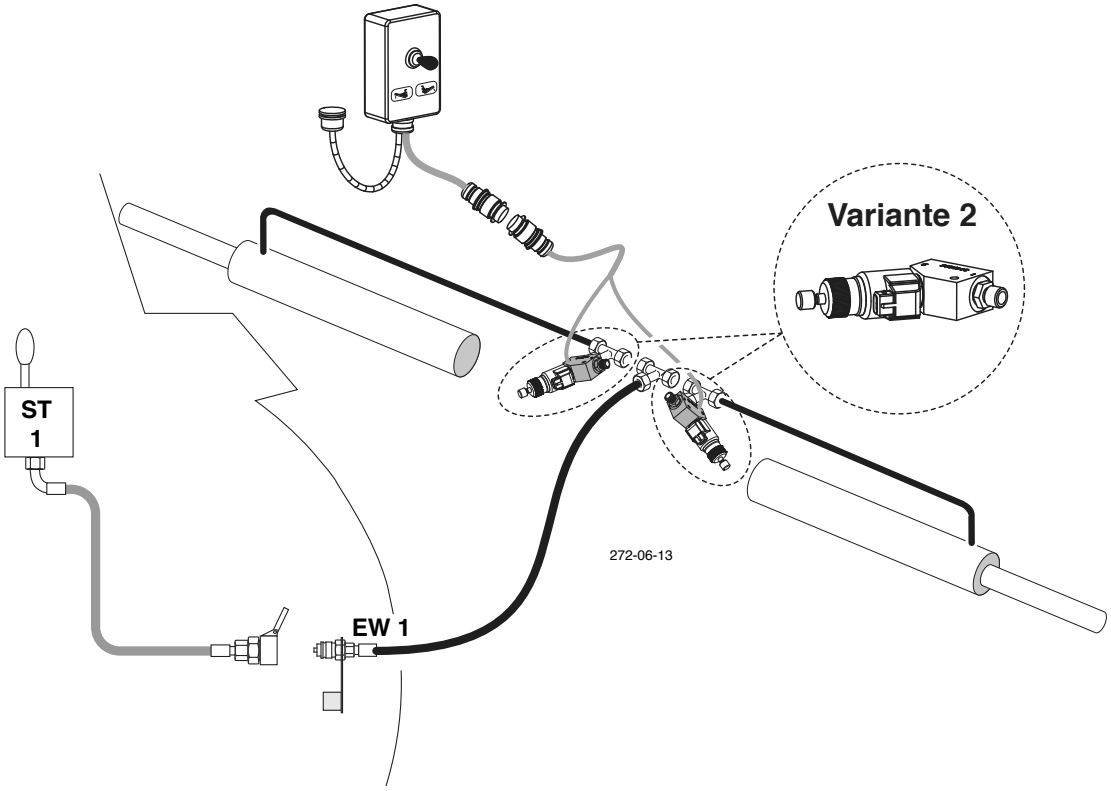

Attention!

Do not enter the mower unit area as long as the drive is running.

As optional extra

Variant 2

Electrical preselection

Advantage:

- Only one control unit is required

Function:

- Activate the mower unit to be swivelled on the control unit
  - With activated single lifting, control lamp on control unit lights up
  - Actuate hydraulic servo (ST1) on tractor
  - The mower unit selected is raised to the field transport position (FT)

Technical data

Description		NOVADISC 730 Type 3902	NOVADISC 810 Type 3903	NOVADISC 900 Type 3904
3-point hitch		Cat. II / III	Cat. II / III	Cat. II / III
Working width	[m]	7.24	8.08	8.92
Folded up parking height[1)]	m	2.9	3.3	3.7
Transport height[1)]	[m]	3.1	3.5	3.9
No. of mowing discs		12	14	16
Number of knives per disc		2	2	2
Distance blade flight circle	[m]	2.0	2.0	2.0
Coverage capacity	[ha/h]	7	9	11
P.t.o. speed	[min^{-1}]	1000	1000	1000
Free-run cardan shaft		yes	yes	yes
Power requirements	[kW/hp]	63 / 85	70 / 95	74 / 100
Lifting hydraulic (single-action)		yes	yes	yes
Weight [1)]	[kg]	1260	1400	1520
Continuous sound emission level		88.5 dB (A)	88.5 dB (A)	88.5 dB (A)

[1)] with folded lateral guards

All data subject to alteration without notice

Necessary connections:

- 1 single-action hydraulic plug connection (no individual lifting possible)
- 2 single-action hydraulic plug-in connectors (for individual lifting)
  Min. pressure: 80 bar
  pressure max.: 180 bar

Optional equipment:

- Swath discs
- Conveying cone
- Wear skids
- High cut skids
- Parking bearings
- Electrical preselection switch
- Rotation direction of the mower bar "mountain drive" for NOVADISC 730

The defined use of the mower unit

The mower **"NOVADISC 730 (Type PSM 3902), NOVADISC 810 (Type PSM 3903) and NOVADISC 900 (Type PSM 3904)"** is designed exclusively for the usual agricultural works.

- The mowing of grassland and short stemmed fodder.

Any other use outside of this is regarded as not in accordance with the defined use.

The manufacturer accepts no liability for any damage arising as a result thereof; the user accepts sole responsibility.

- Use as intended also includes complying with the manufacturer's stipulated maintenance and repair conditions.

Position of type plate

The chassis number is engraved on the type plate shown at the side. Warranty claims, enquiries and spare part orders cannot be processed without the chassis number.

Please enter the name on the title page of the Operator's Instructions immediately upon taking delivery of the vehicle / implement.

[1)] Weight: Possible variants depending on machine features.

SUPPLEMENT

The original cannot be copied ...

GB

Things will run better with genuine Pöttinger parts

Original inside

- **Quality and precise fitting**
  - Operating safety.
- **Reliable operation**
- **Longer lasting**
  - Economy
- **Guaranteed availability** through your Pöttinger Sales Service.

The decision must be made, ”original” or ”imitation”? The decision is often governed by price and a ”cheap buy” can sometimes be very expensive.

Be sure you purchase the ”Original” with the cloverleaf symbol!

PÖTTINGER

Recommendations for work safety

All points refering to safety in this manual are indicated by this sign.

1. Operating instructions

a. The operating instructions are important for the correct operation of the machine. Make sure that the operating instructions are always on hand when operating the machine.

b. Keep the operating instructions as long as the machine is in your hands.

c. Pass the operating instructions on to the buyer when selling the machine.

d. Make sure that all safety and warning symbols remain attached on the machine and keep them readable. The hazard warnings provide important information for a safe operation and, thus, your safety.

2. Qualified personnel

a. Only persons of legal age, mentally and physically able and having been trained or familiarized accordingly must operate this machine.

b. Persons not yet trained or familiarized or under training must only operate this machine under the supervision of an experienced person.

c. Inspection, setting and repair work must only be performed by authorized persons.

3. Repair work

a. These instructions only refer to service, maintenance and repair operations the user is able to carry out without assistance. Any work beyond this scope has to be carried out at authorized workshops only.

b. Repairs on the electrical and hydraulic system, preloaded springs, pressure accumulators, etc. require sufficient knowledge, correct tools and protective clothing and, thus, must only be performed at authorized workshops.

4.) Defined use

a. See "Technical Data".

b. The keeping of operating, service and maintenance requirements layed down by the manufacturer also come under the heading of "defined use".

5.) Spare parts

a. The **original components and accessories** have been designed especially for these machines and appliances.

b. We want to make it quite clear that components and accesories that have not been supplied by us have not been tested by us.

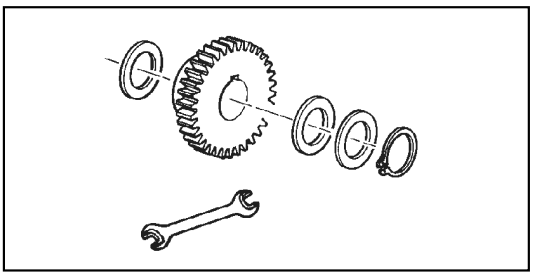

c. The installation and/or use of such products can, therefore, negatively change or influence the construction characteristics of the appliance. We are not liable for damages caused by the use of components and accessories that have not been supplied by us.

d. Alterations and the use of auxiliary parts that are not permitted by the manufacturer render all liability invalid.

6.) Protection devices

a. All protection devices must remain on the machine and be maintained in proper condition. Punctual replacement of worn and damaged covers is essential.

7.) Before starting work

a. Before commencing work, the operator must be aware of all operating devices and functions. The learning of these is too late after having already commenced operation!

b. The vehicle is to be tested for traffic and operating safety before each operation.

8.) Asbestos

a. Certain sub-supplied components of the vehicle may contain asbestos due to technical reasons. Observe the warning on spare parts.

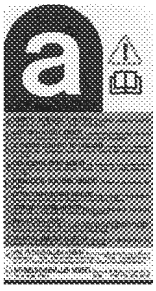

9.) Transport of persons prohibited

a. The transport of persons on the machine is not permitted.

b. The machine may only be driven on public roads when in the position stipulated for road transport.

10.) Driving ability with auxiliary equipment

a. The towing vehicle is to be sufficiently equiped with weights at the front or at the rear in order to guarantee the steering and braking capacity (a minimum of 20% of the vehicle's tare weight on the front axle).

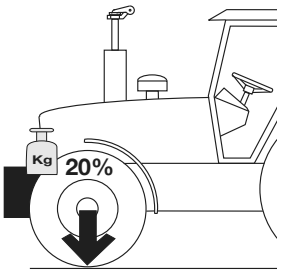

b. The driving ability is influenced by ground conditions and by the auxiliary equipment. The driving must be adapted to the corresponding terrain and ground conditions.

c. When driving through curves with a connected appliance, observe the radius and swinging mass of the appliance.

d. When travelling in a curve with attached or semimounted implements, take into account the working range and swing mass of the implement!

11.) General

a. Before attaching implement to three-point linkage, move system lever into a position whereby unintentional raising or lowering is ruled out!

b. Danger of injury exists when coupling implement to tractor!

c. Danger of injury through crushing and cutting exists in the three-point linkage area!

d. Do not stand between tractor and implement when using three-point linkage external operation!

e. Attach and detach drive shaft only when motor has stopped.

f. When transporting with raised implement, secure operating lever against lowering!

g. Before leaving tractor, lower attached implement to the ground and remove ignition key!

h. Nobody is to stand between tractor and implement without tractor being secured against rolling using parking brake and/or wheel chocks!

i. For all maintenance, service and modification work, turn driving motor off and remove universal drive.

12.) Cleaning the machine

a. Do not use high-pressure washers for the cleaning of bearing- and hydraulic parts.

Matching driveshaft to tractor

To determine the actual length required, hold the two halves of the driveshaft side by side.

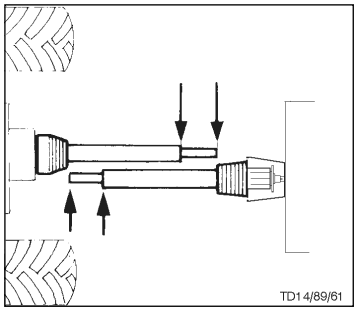

T rimming procedure

- To adjust the length, place the pto halves in the shortest operating position (L2) next to one another and mark.

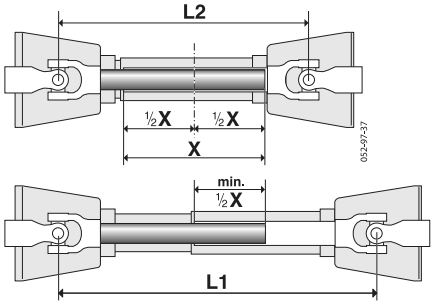

Caution!

- Note the maximum operating length (L1)
  - Aim at the maximum possible tube superimposition (min. 1/2 X)
- Trim the inner and outer protective tube equally
- Attach overload fuse (2) at the implement!
- Always check that drive shaft locks are securely engaged before starting work.

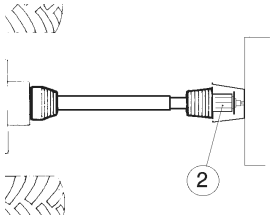

Safety chain

- Use chain to prevent tube guard from rotating.

  Ensure sufficient swivel space for the cardan shaft!
- Trim the safety chain so that it cannot wind around the cardan shaft.

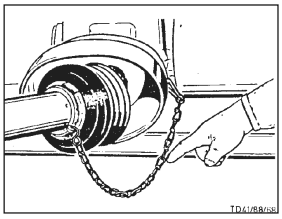

Instructions for working

The permissible pto speed may not be exceeded when using the implement.

- The hitched implement may continue to run after the pto is switched off. Work may only be performed once it has reached complete standstill.
- The cardan shaft must be put down or secured using a chain when the implment is parked. Do not use safety chain (H) to suspend the cardan shaft.

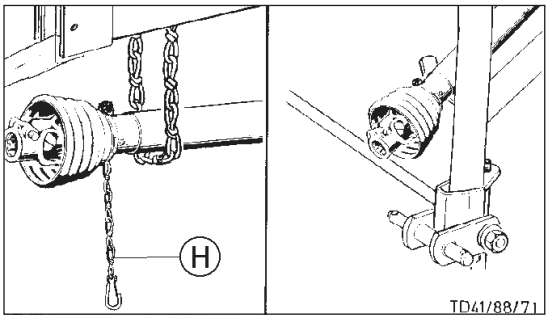

Wide-angle joint:

Maximum angle in operation and at standstill 70°.

Standard joint :

Maximum angle at standstill 90°.

Maximum angle in operation 35°.

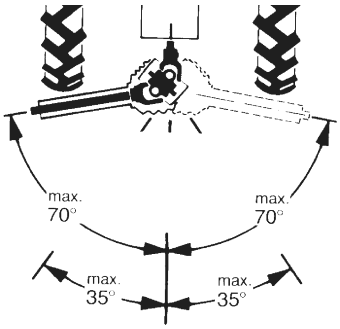

Maintenance

Replace work covers immediately.

- Lubricate with a brand-name grease before starting work and every 8 hours worked.
- Before any extended period of non-use, clean and lubricate driveshaft.

  For winter working, grease the tube guards, to avoid them freezing together.

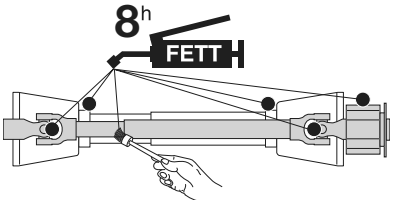

Be advised!

Only use the cardan shaft supplied or stated; otherwise the warranty claims for any damage are not valid.

Important for driveshafts with friction clutch

Torque is limited with overloading and brief torque peaks and evenly transferred during slipping.

Prior to initial operation and after long periods out of use, check friction clutch for proper function.

a) Measure dimension „L“ at compression spring of K90, K90/4 and K94/1 or at set screw of K92E and K92/4E.

b.) Loosen screws to release the pressure on the friction disk.

Slip the clutch.

c.) Tighten set screws to dimension "L".

Clutch is ready for use.

K90,K90/4,K94/1

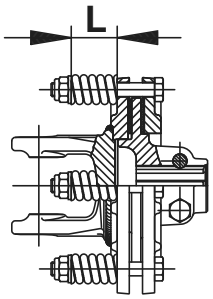

K92E,K92/4E

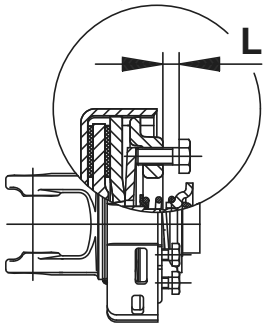

Lubrication chart

X^h	after every X hours operation
40 F	all 40 loads
80 F	all 80 loads
1 J	once a year
100 ha	every 100 hectares
BB	if necessary
FETT	GREASE
OL	Oil
1 =	Number of grease nipples
1 =	Number of grease nipples
(III), (IV)	see supplement „Lubrificants“
[l]	Litre
– – – –	Variation
	See manufacturer’s instructions
↺	Rotations per minute
	Always screw in measuring stick up to stop.

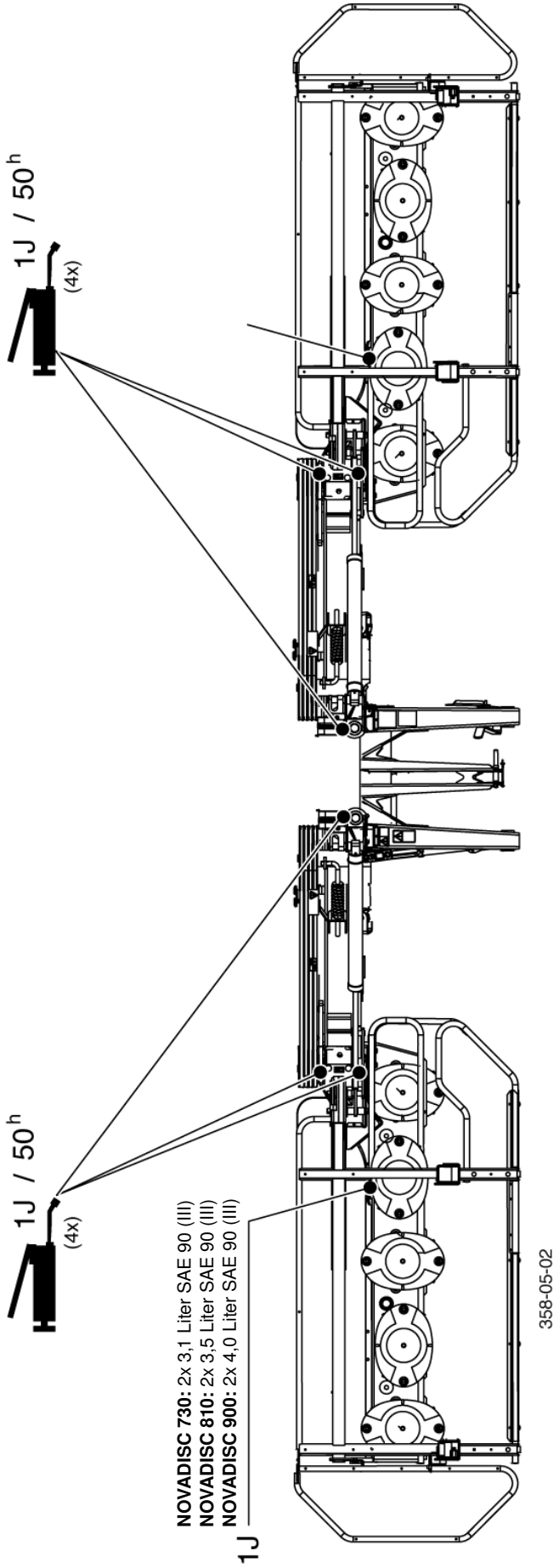
1J / 50h
(4x)
1J / 50h
(4x)
1J
NOVADISC 730: 2x 3,1 Liter SAE 90 (III)
NOVADISC 810: 2x 3,5 Liter SAE 90 (III)
NOVADISC 900: 2x 4,0 Liter SAE 90 (III)
358-05-02

Lubricants

Edition 2013

The performance and the lifetime of the farm machines are highly depending on a careful maintenance and application of correct lubricants. our schedule enables an easy selection of selected products.

The applicable lubricants are symbolized (eg. “III”). According to this lubricant product code number the specification, quality and brandname of oil companies may easily be determined. The listing of the oil companies is not said to be complete.

Gear oils according to operating instructions - however at least once a year.

- Take out oil drain plug, let run out and duly dispose waste oil.

Before garaging (winter season) an oil change and greasing of all lubricating points has to be done. Unprotected, blanc metal parts outside (joints, etc.) have to be protected against corrosion with a group "Iv" product as indicated on the reverse of this page.

Corrosion protection: Fluid 466

Lubricant indicator	**I**	(II) ÖL	III	FETT (IV)	**V**	**VI**	**VII**
required quality level niveau	HYDRAULIKöL HLP DIN 51524 Teil 2 See notes: * ** ***	motor oil SAE 30 according to API CD/SF	gear oil, SAE 90 resp. SAE 85 W-140 according to API-GL 4 or API-GL 5	lithium grease	transmission grease	complex grease	gear oil SAE 90 resp. SAE 85 W-140 according to API-GL 5

Company	I	(II) OL	III	(IV) FETT	V	VI	VIII	NOTATIONS
AGIP	OSO 32/46/68 ARNICA 22/46	MOTOROIL HD 30 SIGMA MULTI 15W-40 SUPER TRACTOROIL UNIVERS. 15W-30	ROTRA HY 80W-90/85W-140 ROTRA MP 80W-90/85W-140	GR MU 2	GR SLL GR LFO	-	ROTRA MP 80W-90 ROTRA MP 85W-140	* The international specification J 20 A is necessary for compound operation with wet brake tractors. ** HLP-(D) + HV hydraulic oils *** HLP + HV hydraulic oils with a vegetable oil basis, biodegradable and therefore environmentally friendly.
ARAL	VITAM GF 32/46/68 VITAM HF 32/46	SUPER KOWAL 30 MULTI TURBORAL SUPER TRAKTORAL 15W-30	GETRIEBEÖL EP 90 GETRIEBEÖL HYP 85W-90	ARALUB HL 2	ARALUB FDP 00	ARALUB FK 2	GETRIEBEÖL HYP 90	
AVIA	AVILUB RL 32/46 AVILUB VG 32/46	MOTOROIL HD 30 MULTIGRADE HDC 15W-40 TRACTAVIA HF SUPER 10 W-30	GETRIEBEÖL MZ 90 M MULTIHYP 85W-140	AVIA MEHRZWECKFETT AVIA ABSCHMIERFETT	A V I A GETRIEBEFLIESSFETT	A V I A L U B SPEZIALFETT LD	GETRIEBEÖL HYP 90 EP MULTIHYP 85W-140 EP	
BAYWA	HYDRAULIKÖL HLP 32/46/68 SUPER 2000 CD-MC * HYDRA HYDR. FLUID * HYDRAULIKÖL MC 530 ** PLANTOHYD 40N ***	SUPER 2000 CD-MC SUPER 2000 CD HD SUPERIOR 20 W-30 HD SUPERIOR SAE 30	SUPER 8090 MC HYPOID 80W-90 HYPOID 85W-140	MULTI FETT 2 SPEZIALFETT FLM PLANTOGEL 2 N	GETRIEBEFLIESSFETT NLGI 0 RENOLIT DURAPLEX EP 00 PLANTOGEL 00N	RENOPLEX EP 1	HYPOID 85W-140	
BP	ENERGOL SHF 32/46/68	VISCO 2000 ENERGOL HD 30 VANELLUS M 30	GEAR OIL 90 EP HYPOGEAR 90 EP	ENERGREASE LS-EP 2	FLIESSFETT NO ENERGREASE HTO	OLEX PR 9142	HYPOGEAR 90 EP HYPOGEAR 85W-140 EP	
CASTROL	HYSPIN AWS 32/46/68 HYSPIN AWH 32/46	RX SUPER DIESEL 15W-40 POWERTRANS	EPX 80W-90 HYPOY C 80W-140	CASTROLGREASE LM	IMPERVIA MMO	CASTROLGREASE LMX	EPX 80W-90 HYPOY C 80W-140	
ELAN	HLP 32/46/68 HLP-M M32/M46	MOTORÖL 100 MS SAE 30 MOTORÖL 104 CM 15W-40 AUSTROTRAC 15W-30	GETRIEBEÖL MP 85W-90 GETRIEBEÖL B 85W-90 GETRIEBEÖL C 85W-90	LORENA 46 LITORA 27	RHENOX 34	-	GETRIEBEÖL B 85W-90 GETRIEBEÖL C 85W-140	
ELF	OLNA 32/46/68 HYDRELF 46/68	PERFORMANCE 2 B SAE 30 8000 TOURS 20W-30 TRACTORELF ST 15W-30	TRANSELF TYP B 90 85W-140 TRANSELF EP 90 85W-140	EPEXA 2 ROLEXA 2 MULTI 2	GA O EP POLY G O	MULTIMOTIVE 1	TRANSELF TYP B 90 85W-140 TRANSELF TYP BLS 80 W-90	
ESSO	NUTO H 32/46/68 NUTO HP 32/46/68	PLUS MOTORÖL 20W-30 UNIFARM 15W-30	GEAROIL GP 80W-90 GEAROIL GP 85W-140	MULTI PURPOSE GREASE H	FIBRAX EP 370	NEBULA EP 1 GP GREASE	GEAR OIL GX 80W-90 GEAR OIL GX 85W-140	
EVVA	ENAK HLP 32/46/68 ENAK MULTI 46/68	SUPER EVVAROL HD/B SAE 30 UNIVERSAL TRACTOROIL SUPER	HYPOID GA 90 HYPOID GB 90	HOCHDRUCKFETT LT/SC 280	GETRIEBEFETT MO 370	EVVA CA 300	HYPOID GB 90	
FINA	HYDRAN 32/46/68	DELTA PLUS SAE 30 SUPER UNIVERSAL OIL	PONTONIC N 85W-90 PONTONIC MP 85W-90 85W-140 SUPER UNIVERSAL OIL	MARSON EP L 2	NATRAN 00	MARSON AX 2	PONTONIC MP 85W-140	
FUCHS	• TITAN HYD 1030 • AGRIFARM STOU MC 10W-30 • AGRIFARM UTTO MP • PLANTOHYD 40N ***	• AGRIFARM STOU MC 10W-30 • TITAN UNIVERSAL HD	• AGRIFARM GEAR 80W90 • AGRIAFRM GEAR 85W-140 • AGRIFARM GEAR LS 90	• AGRIFARM HITEC 2 • AGRIFARM PROTEC 2 • RENOLIT MP • RENOLIT FLM 2 • PLANTOGEL 2-N	• AGRIFARM FLOWTEC 000 • RENOLIT SO-GFO 35 • RENOLIT DURAPLEX EP 00 • PLANTOGEL 00N	• RENOLIT DURAPLEX EP 1	• AGRIFARM GEAR 8090 • AGRIFARM GEAR 85W-140 • AGRIFARM GEAR LS90	
GENOL	HYDRAULIKÖL HLP/32/46/68 HYDRAMOT 1030 MC * HYDRAULIKÖL 520 ** PLANTOHYD 40N ***	MULTI 2030 2000 TC HYDRAMOT 15W-30 HYDRAMOT 1030 MC	GETRIEBEÖL MP 90 HYPOID EW 90 HYPOID 85W-140	MEHRZWECKFETT SPEZIALFETT GLM PLANTOGEL 2 N	GETRIEBEFLIESSFETT PLANTOGEL 00N	RENOPLEX EP 1	HYPOID EW 90 HYPOID 85W-140	
MOBIL	DTE 22/24/25 DTE 13/15	HD 20W-20 DELVAC 1230 SUPER UNIVERSAL 15W-30	MOBILUBE GX 90 MOBILUBE HD 90 MOBILUBE HD 85W-140	MOBILGREASE MP	MOBILUX EP 004	MOBILPLEX 47	MOBILUBE HD 90 MOBILUBE HD 85W-140	
RHG	RENOLIN B 10/15/20 RENOLIN B 32 HVI/46HVI	EXTRA HD 30 SUPER HD 20 W-30	MEHRZWECKGETRIEBEÖISAE90 HYPOID EW 90	MEHRZWECKFETT RENOLIT MP DURAPLEX EP	RENOSOD GFO 35	RENOPLEX EP 1	HYPOID EW 90	

Company	I	(II) OIL	III	FETT (IV)	V	VI	VIII	NOTATIONS
SHELL	TELLUS S32/S46/S68 TELLUS T 32/T46	AGROMA 15W-30 ROTELLA X 30 RIMULA X 15W-40	SPIRAX 90 EP SPIRAX HD 90 SPIRAX HD 85/140	RETINAX A ALVANIA EP 2	SPEZ. GETRIEBEFETT H SIMMNIA GREASE O	AEROSHELL GREASE 22 DOLIUM GREASE R	SPIRAX HD 90 SPIRAX HD 85W-140	* The international specification J 20 A is necessary for compound operation with wet brake tractors. ** HLP-(D) + HV hydraulic oils *** HLP + HV hydraulic oils with a vegetable oil basis, biodegradable and therefore environmentally friendly.
TOTAL	AZOLLA ZS 32, 46, 68 EQUIVIS ZS 32, 46, 68	RUBIA H 30 MULTAGRI TM 15W-20	TOTAL EP 85W-90 TOTAL EP B 85W-90	MULTIS EP 2	MULTIS EP 200	MULTIS HT 1	TOTAL EP B 85W-90	
VALVOLINE	ULTRAMAX HLP 32/46/68 SUPER TRAC FE 10W-30* ULTRAMAX HVLP 32 ** ULTRAPLANT 40 ***	SUPER HPO 30 STOU 15W-30 SUPER TRAC FE 10W-30 ALL FLEET PLUS 15W-40	HP GEAR OIL 90 oder 85W-140 TRANS GEAR OIL 80W-90	MULTILUBE EP 2 VAL-PLEX EP 2 PLANTOGEL 2 N	RENOLIT LZR 000 DEGRALUB ZSA 000	DURAPLEX EP 1	HP GEAR OIL 90 oder 85W-140	
VEEDOL	ANDARIN 32/46/68	HD PLUS SAE 30	MULTIGRADE SAE 80/90 MULTIGEAR B 90 MULTIGEAR C SAE 85W-140	MULTIPURPOSE	-	-	MULTIGEAR B 90 MULTI C SAE 85W-140	
WINTERSHALL	WIOLAN HS (HG) 32/46/68 WIOLAN HVG 46 ** WIOLAN HR 32/46 *** HYDROLFLUID *	MULTI-REKORD 15W-40 PRIMANOL REKORD 30	HYPOID-GETRIEBEÖL 80W-90, 85W-140 MEHRZWECKGETRIEBEÖL 80W-90	WIOLUB LFP 2	WIOLUB GFW	WIOLUB AFK 2	HYPOID-GETRIEBEÖL 80W-90, 85W-140	
MOTOREX	COREX HLP 32 46 68** COREX HLPD 32 46 68** COREX HV 32 46 68** OEKOSYNT 32 46 68***	EXTRA SAE 30 FARMER TRAC 10W/30	GEAR OIL UNIVERSAL 80W/90 GEAR OIL UNIVERSAL 85W/140	FETT 176 GP FETT 190 EP FETT 3000	FETT 174	FETT 189 EP FETT 190 EP FETT 3000	GEAR OIL UNIVERSAL 80W/90 GEAR OIL UNIVERSAL 85W/140	

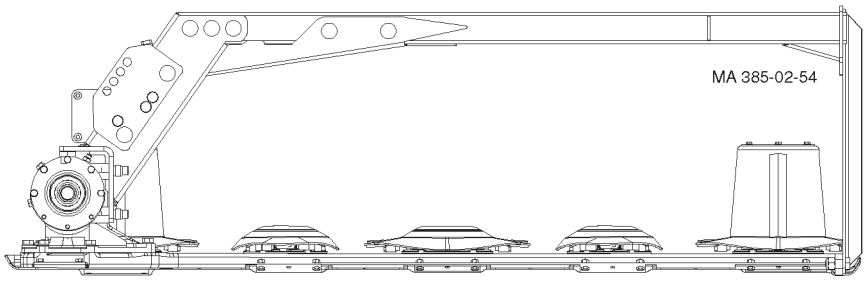

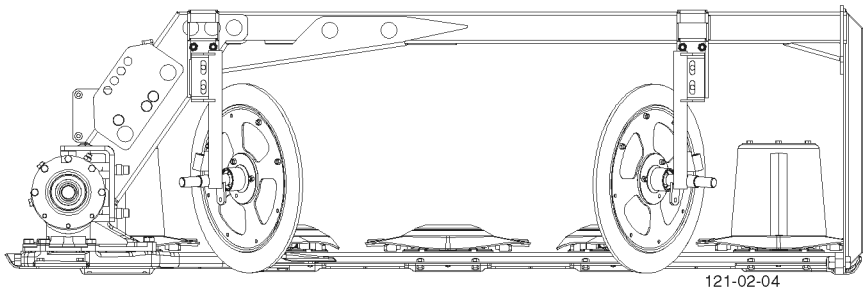

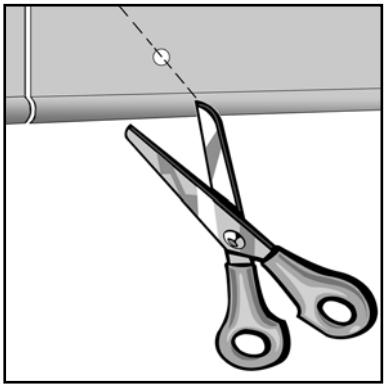

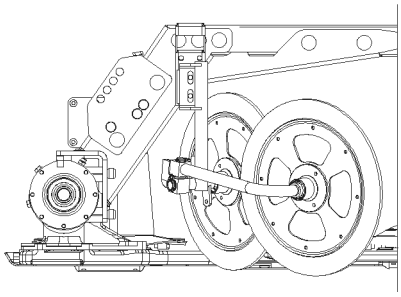

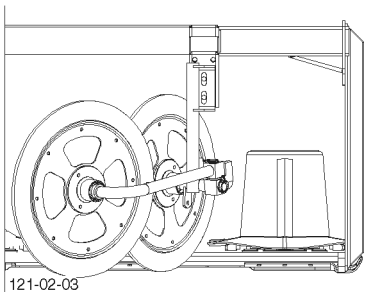

MA 385-02-53

Repairs to the cutter bar

- Markings aligned (K1, K2).
  up to 2005 model
  (Marking K1 = Centre point on the hub)
  from 2006 model
  (Marking K1 = Larger countersink when drilling)
- Only screw on nut (M) when there is sufficient thread length (L) to prevent any damage.
- Secure nut (M) against loosening
  - with "Loctite 242" or an equivalent product
  - and centre point (2x)

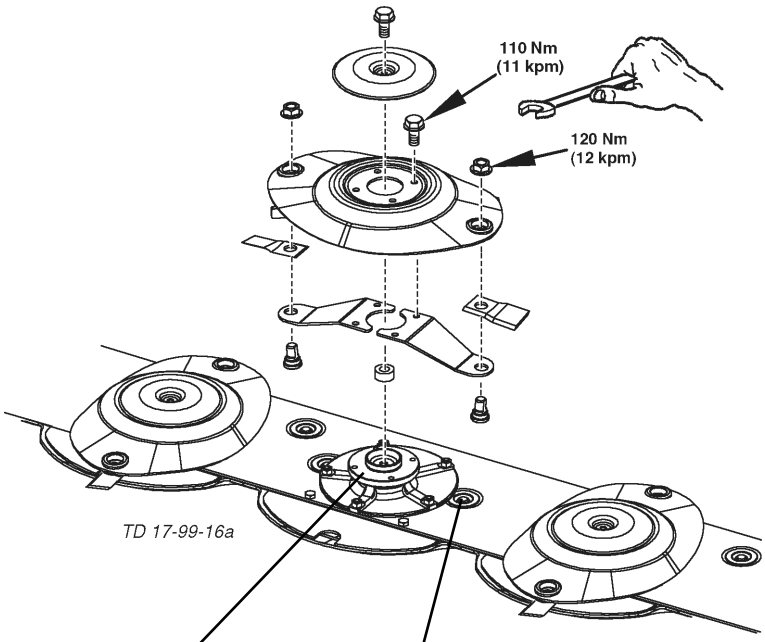

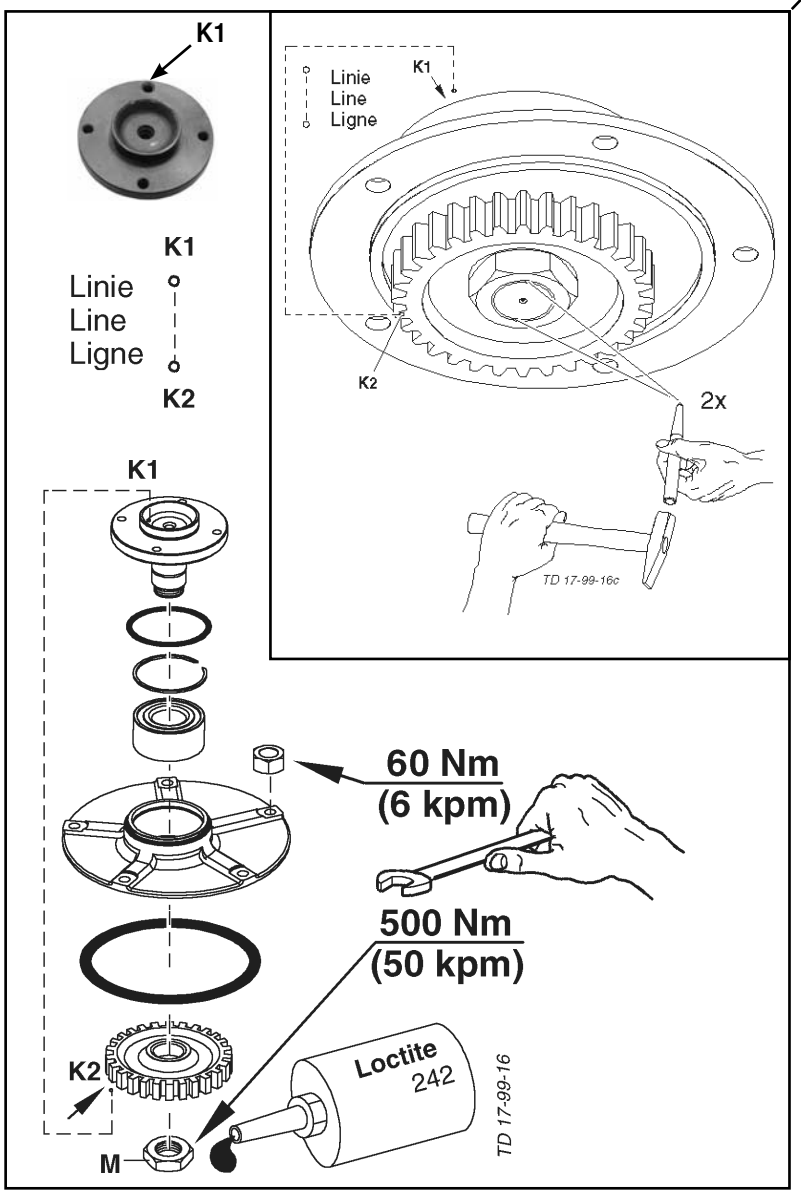

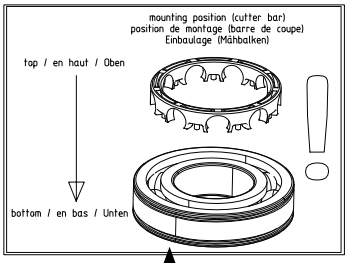

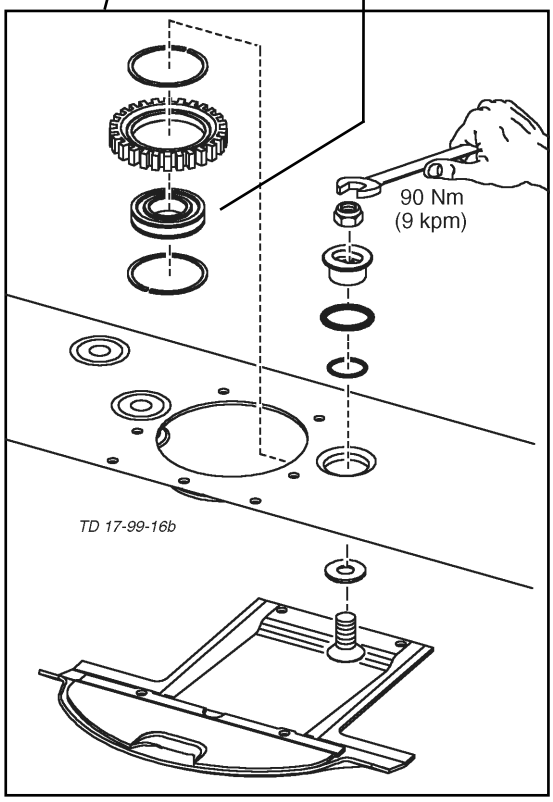

Assembly instructions

- For easier assembly of the cutting discs please proceed as follows:
  1. With the disc's direction of rotation to the left = Marking (K1) at the top
  2. With the disc's direction of rotation to the right = Marking (K1) at the bottom

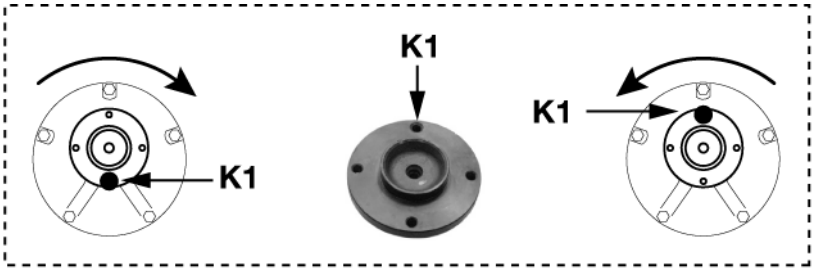

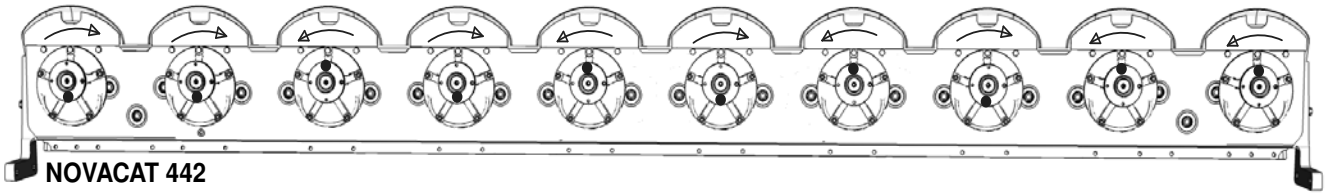

NOVACAT 442

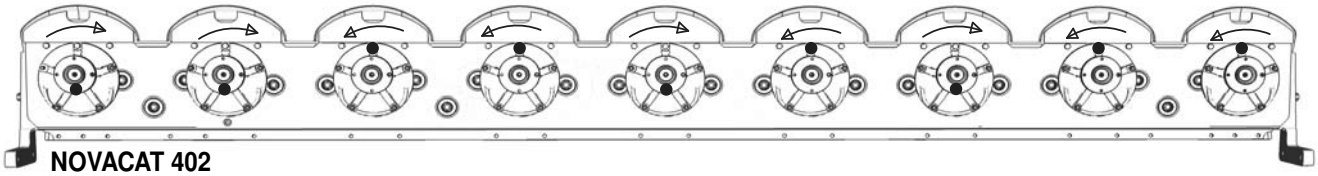

NOVACAT 402

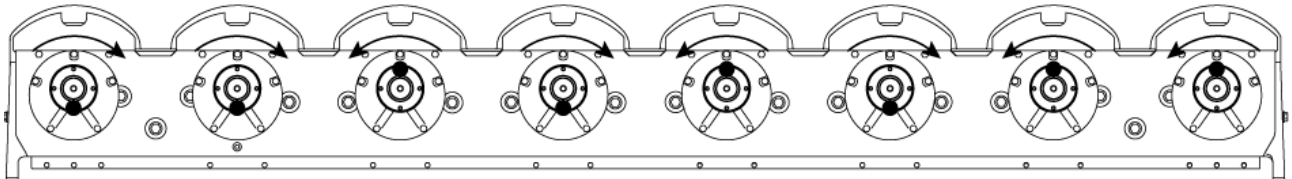

NOVACAT 351 a-motion ED RC / NOVACAT 352 ED RC /NOVACAT 352V / NOVACAT 351 classic

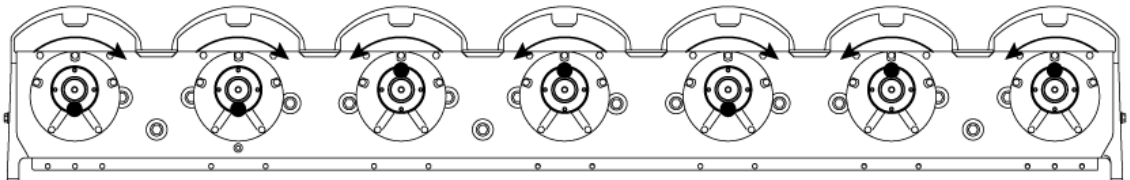

NOVACAT 301 classic / 301 a-motion ED RC / NOVACAT 302 ED RC

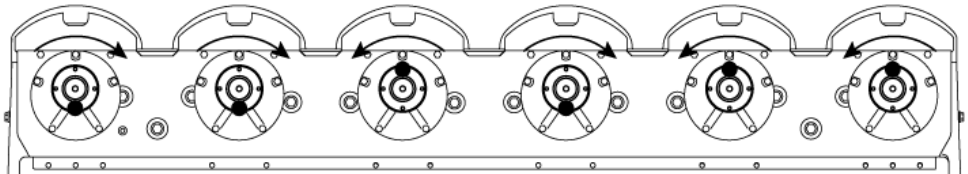

NOVACAT 261 classic / 261 a-motion ED RC / NOVACAT 262 ED RC

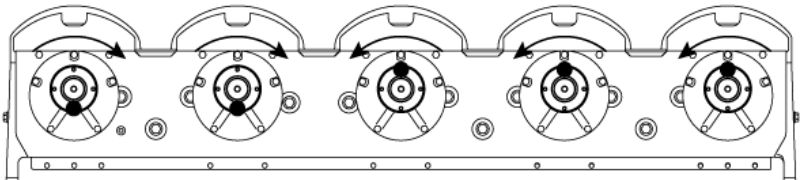

NOVACAT 225 H ED / NOVACAT 225 H CRW 271-08-01

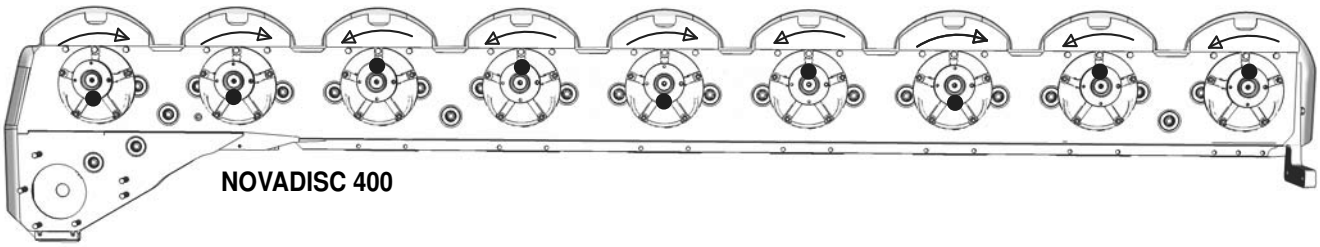

NOVADISC 400

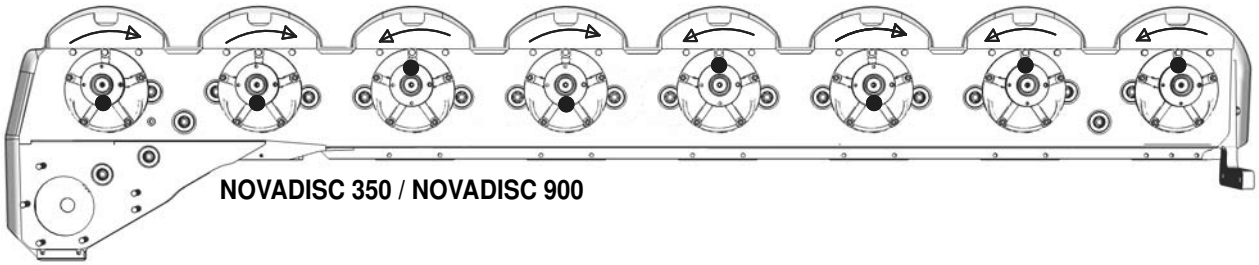

NOVADISC 350 / NOVADISC 900

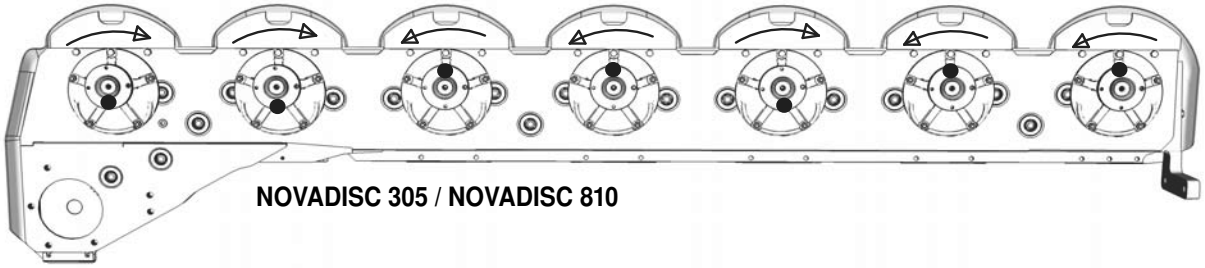

NOVADISC 305 / NOVADISC 810

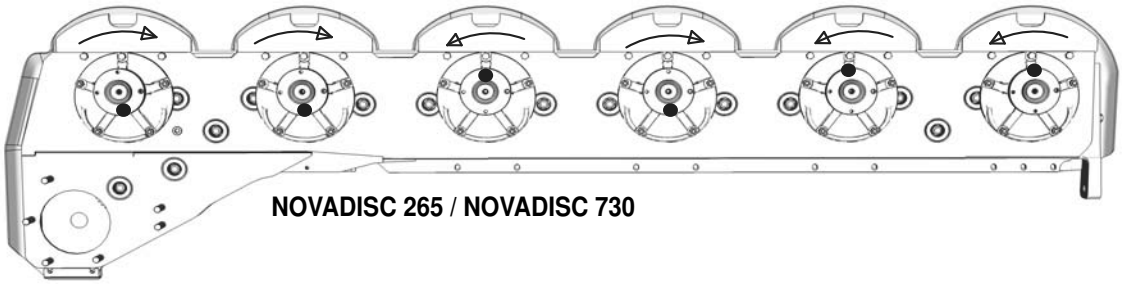

NOVADISC 265 / NOVADISC 730

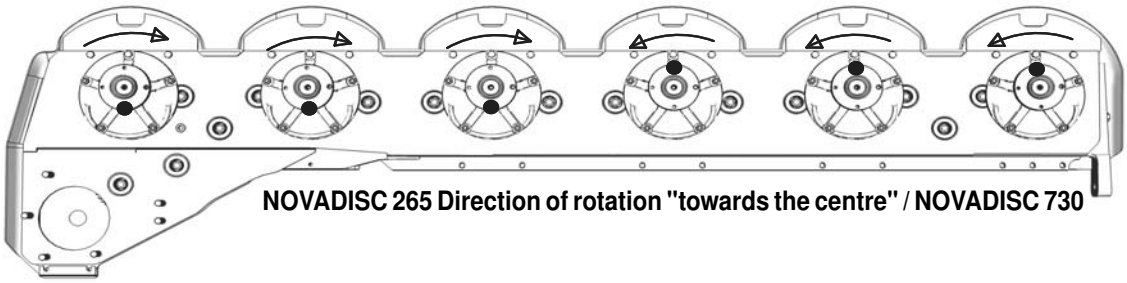

NOVADISC 265 Direction of rotation "towards the centre" / NOVADISC 730

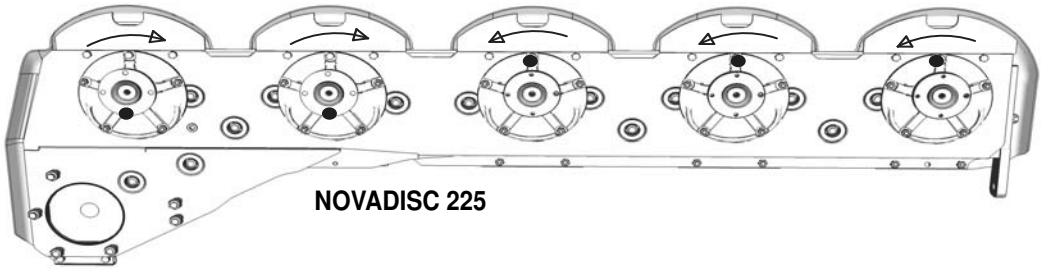

NOVADISC 225

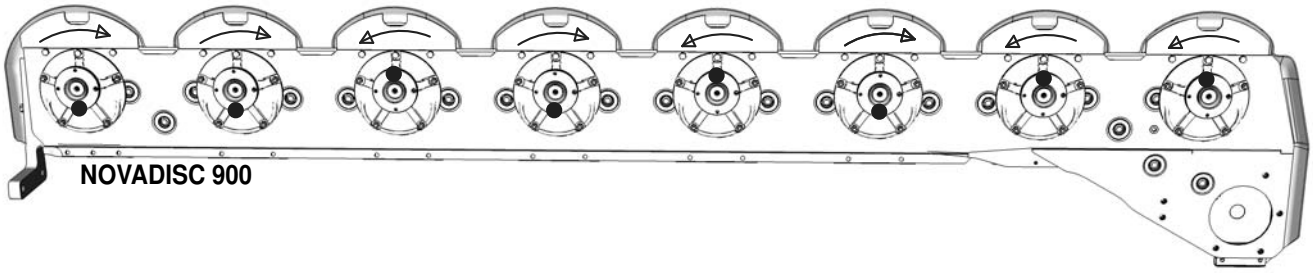

NOVADISC 900

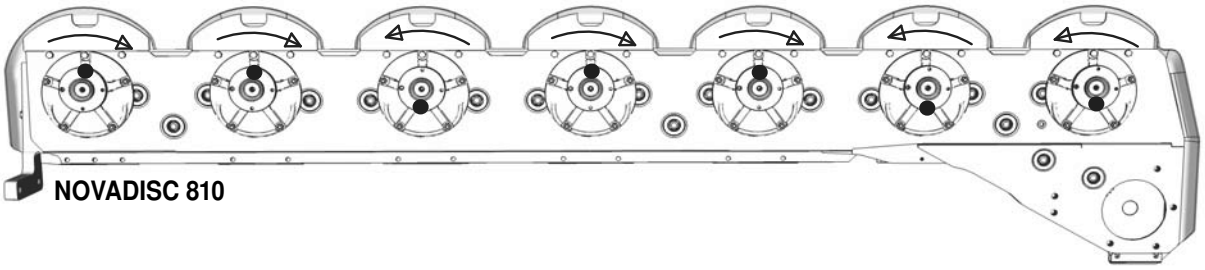

NOVADISC 810

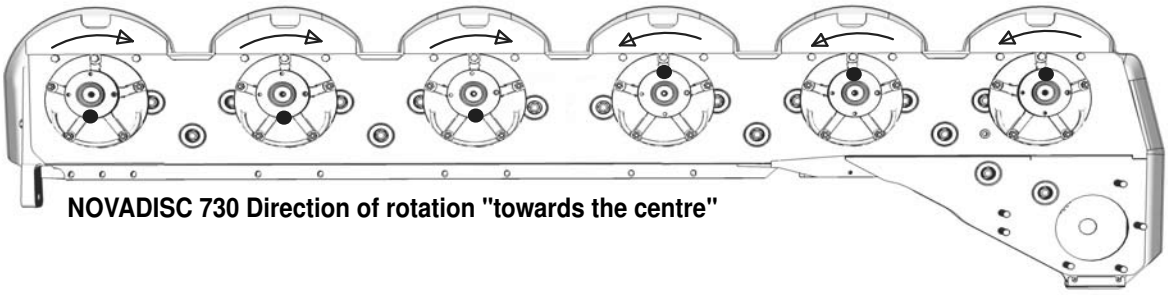

NOVADISC 730 Direction of rotation "towards the centre"

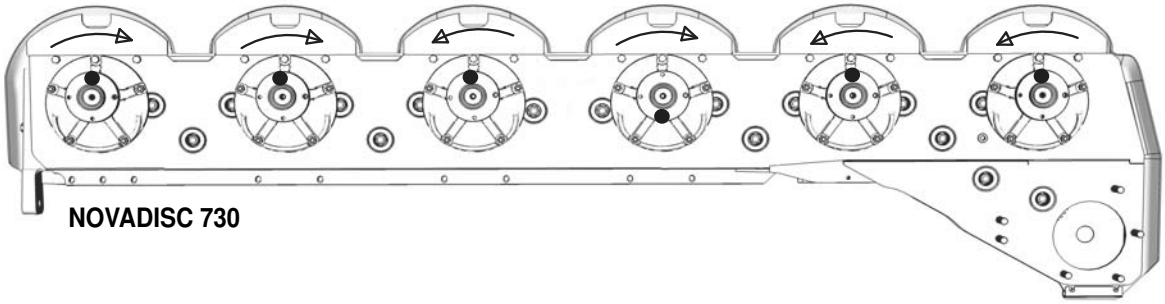

NOVADISC 730

Combination of tractor and mounted implement

The mounting of implements on the front or rear three point linkage shall not result in exceeding the maximum permissible weight, the permissible axle loads and the tyre load carrying capacities ot the tractor. The front axle of the tractor must always to be loaded with at least 20 % of the unladen weight of the tractor.

Make sure before buying an implement that these conditions are fulfilled by carrying out the following calculations or by weighing the tractor/implement combination.

Determination of the total weight, the axle loads, the tyre load carrying capacity and the necessary minimum ballasting

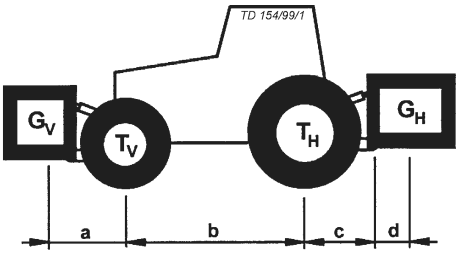

For the calculation you need the following data:

T_L [kg]	unladen weight of tractor	1
T_V [kg]	front axle load of unladen tractor	1
T_H [kg]	rear axle load of unladen tractor	1
G_H [kg]	combined weight of rear mounted implement/rear ballast	2
G_V [kg]	combined weight of front mounted implement/front ballast	2
a [m]	distance from centre of gravity for combined front mounted implement/front ballast to front axle centre	2 3
b [m]	Tractor wheelbase	1 3
c [m]	distance from rear axle centre to centre of lower link balls	1 3
d [m]	distance from centre of lower link balls to centre of gravity for combined rear mounted implement/rear ballast	2

1 see instruction handbook of the tractor
2 see price list and/or instruction handbook of the implement
3 to be measured

Consideration of rear mounted implement and front/rear combinations

1. CALCULATION OF MINIMUM BALLASTING AT THE FRONT $G_{V\,min}$

Record the calculated minimum ballasting which is needed at the front of the tractor into the table.

$$G_{V\ \min} = \frac{G_H \bullet (c+d) - T_V \bullet b + 0{,}2 \bullet T_L \bullet b}{a+b}$$

Front mounted implement

2. CALCULATION OF THE MINIMUM $G_{H\,min}$

$$G_{H\ \min} = \frac{G_V \bullet a - T_H \bullet b + 0{,}45 \bullet T_L \bullet b}{b+c+d}$$

Record the calculated minimum ballasting which is needed at the rear of the tractor into the table.

3. CALCULATION OF THE REAL FRONT AXLE LOAD $T_{V\ tat}$

(If with the front mounted implement (G_V) the required minimum front ballasting ($G_{V\ min}$) cannot be reached, the weight of the front mounted implement has to be increased to the weight of the minimum ballasting at the front!)

$$T_{V\ tat} = \frac{G_V \bullet (a+b) + T_V \bullet b - G_H \bullet (c+d)}{b}$$

Record the calculated real front axle load and the permissible front axle load of the tractor into the table.

4. CALCULATION OF THE REAL TOTAL WEIGHT G_{tat}

(If with the rear mounted implement (G_H) the required minimum rear ballasting ($G_{H\ min}$) cannot be reached, the weight of the rear mounted implements has to be increased to at least the weight of the minimum ballasting at the rear!)

$$G_{tat} = G_V + T_L + G_H$$

Record the calculated real and the permissible total weight given in the instruction handbook for the tractor into the table.

5. CALCULATION OF THE REAL REAR AXLE LOAD $T_{H\ tat}$

Record the calculated real and the permissible rear axle load given in the instruction handbook for the tractor into the table.

$$T_{H\ tat} = G_{tat} - T_{V\ tat}$$

6. TYRE LOAD CARRYING CAPACITY

Record double the value (two tyres) of the permissible load carrying capacity into the table (see for instance documentation provided by the tyre manufacturer).

Table

	Real value according to calculation		Permissible value according to instruction handbook		**Double** permissible tyre load carrying capacity (two tyres)
Minimum ballasting front/rear	/ kg		---		---
Total weight	kg	≤	kg		---
Front axle load	kg	≤	kg	≤	kg
Rear axle load	kg	≤	kg	≤	kg

The minimum ballasting has to be attached to the tractor either in form of a mounted implement or ballasting weight!

The calculated values must be less or equal (<) the permissible values!

The CE norm is not valid in the United States of America and Canada.

EC Conformity Declaration

Original Conformity Declaration

Name and address of the manufacturer:

PÖTTINGER Landtechnik GmbH
Industriegelände 1
AT - 4710 Grieskirchen

Machine (interchangeable equipment):

mower	NOVADISC 730	810	900
Type	3902	3903	3904
Serial no.			

The manufacturer declares that the machines adhere to all relevant provisions in the following EU directive:

machinery 2006/42/EG

In addition to this, the manufacturer also declares adherence to the other following EU directives and/or relevant provisions

Source of applied, harmonised norms:

EN ISO 12100 EN ISO 4254-1 EN ISO 4254-12

Source of applied miscellaneous technical norms and / or specifications:

Person responsible for documentation:
Andreas Gadermayr
Industriegelände 1
A-4710 Grieskirchen

Markus Baldinger,
CTO R&D

Jörg Lechner,
CTO Production

Grieskirchen, 01.08.2016

D

Im Zuge der technischen Weiterentwicklung arbeitet die PÖTTINGER Landtechnik GmbH ständig an der Verbesserung ihrer Produkte.

Änderungen gegenüber den Abbildungen und Beschreibungen dieser Betriebsanleitung müssen wir uns darum vorbehalten, ein Anspruch auf Änderungen an bereits ausgelieferten Maschinen kann daraus nicht abgeleitet werden.

Technische Angaben, Maße und Gewichte sind unverbindlich. Irrtümer vorbehalten.

F

La société PÖTTINGER Landtechnik GmbH améliore constamment ses produits grâce au progrès technique.

C'est pourquoi nous nous réser-vons le droit de modifier descriptions et illustrations de cette notice d'utilisation, sans qu'on en puisse faire découler un droit à modifications sur des machines déjà livrées.

Caractéristiques techniques, dimensions et poids sont sans engagement. Des erreurs sont possibles.

GB

Following the policy of the PÖTTINGER Landtechnik GmbH to improve their products as technical developments continue, PÖTTINGER reserve the right to make alterations which must not necessarily correspond to text and illustrations contai-ned in this publication, and without incurring obligation to alter any machines previously delivered.

Technical data, dimensions and weights are given as an indication only. Responsibility for errors or omissions not accepted.

NL

PÖTTINGER Landtechnik GmbH werkt permanent aan de verbetering van hun producten in het kader van hun technische ontwikkelingen. Daarom moeten wij ons veranderingen van de afbeeldingen en beschrijvingen van deze gebruiksaanwijzing voorbehouden, zonder dat daaruit een aanspraak op veranderingen van reeds geieverde machines kan worden afgeleid.

Technische gegevens, maten en gewichten zijn niet bindend. Vergissingen voorbehouden.

E

La empresa PÖTTINGER Landtechnik GmbH se esfuerza contínuamente en la mejora constante de sus productos, adaptándolos a la evolución técnica. Por ello nos vemos obligados a reservarnos todos los derechos de cualquier modificación de los productos con relación a las ilustraciones y a los textos del presente manual, sin que por ello pueda ser deducido derecho alguno a la modificación de máquinas ya suministradas.

Los datos técnicos, las medidas y los pesos se entienden sin compromiso alguno.

I

La PÖTTINGER Landtechnik GmbH è costantemente al lavoro per migliorare i suoi prodotti mantenendoli aggiornati rispetto allo sviluppo della tecnica.

Per questo motivo siamo costretti a riservarci la facoltà di apportare eventuali modifiche alle illustrazioni e alle descrizioni di queste istruzioni per l'uso. Allo stesso tempo ciò non comporta il diritto di fare apportare modifiche a macchine già fornite.

I dati tecnici, le misure e i pesi non sono impegnativi. Non rispondiamo di eventuali errori. Ristampa o traduzione, anche solo parziale, solo dietro consenso scritto della

P

A empresa PÖTTINGER Landtechnik GmbH esforçase continuamente por melhorar os seus produtos, adaptando-os à evolução técnica.

Por este motivo, reservamonos o direito de modificar as figuras e as descrições constantes no presente manual, sem incorrer na obrigação de modificar máquinas já fornecidas.

As características técnicas, as dimensões e os pesos não são vinculativos.

PÖTTINGER
Landtechnik GmbH
A-4710 Grieskirchen
Telefon: +43 7248 600-0
Telefax: +43 7248 600-2513
e-Mail: info@poettinger.at
Internet: http://www.poettinger.at

PÖTTINGER Deutschland GmbH
Verkaufs- und Servicecenter Recke
Steinbecker Strasse 15
D-49509 Recke
Telefon: +49 5453 9114-0
Telefax: +49 5453 9114-14
e-Mail: recke@poettinger.at

PÖTTINGER Deutschland GmbH
Servicecenter Landsberg
Spöttinger-Straße 24
Postfach 1561
D-86 899 LANDSBERG / LECH
Telefon:
Ersatzteildienst: +49 8191 9299 - 166 od. 169
Kundendienst: +49 8191 9299 - 130 od. 231
Telefax: +49 8191 59656
e-Mail: landsberg@poettinger.at

PÖTTINGER France S.A.R.L.
129 b, la Chapelle
F-68650 Le Bonhomme
Tél.: +33 (0) 3 89 47 28 30
e-Mail: france@poettinger.at